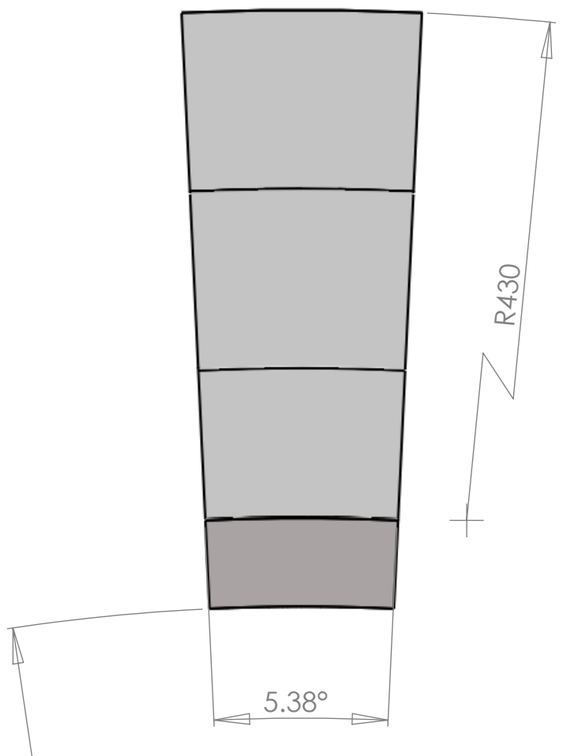

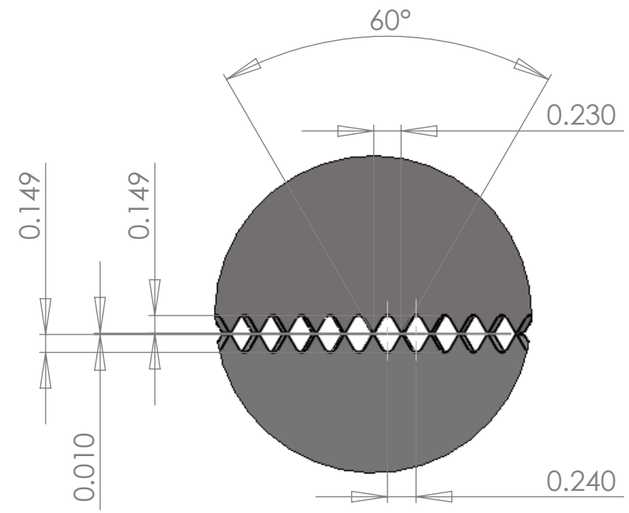

DETAIL B
SCALE 20 : 1

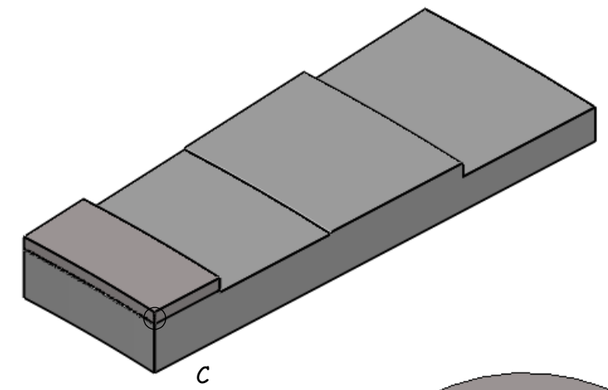

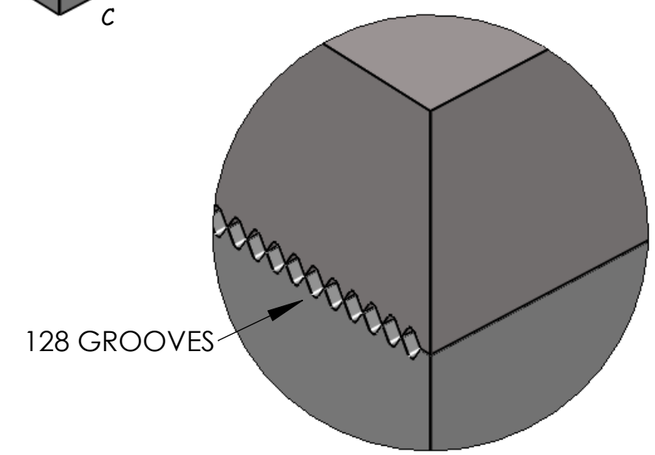

DETAIL C
SCALE 20 : 1

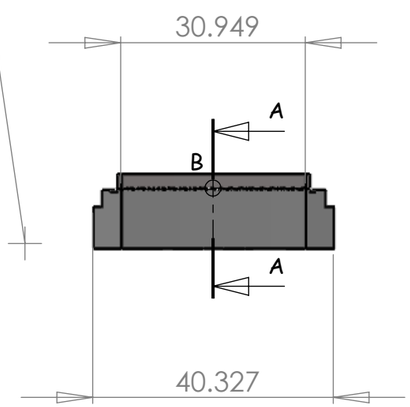

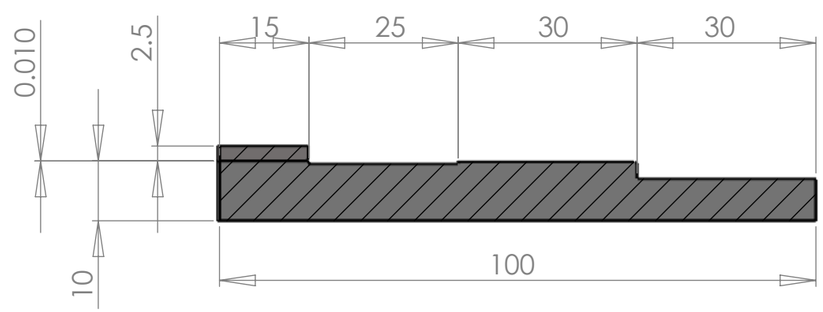

SECTION A-A

	NAME	DATE
DRAWN	Lafever	9/2/2011
CHECKED		
ENG APPR.		
MFG APPR.		
Q.A.		

All dimensions in millimeters

DO NOT SCALE DRAWING

BigBOSS

TITLE:

Slit-Module Workup-300x128

SIZE	PART	REV
B	SlitModuleBlank-300x128	

SCALE: 1:1 | SHEET 1 OF 1