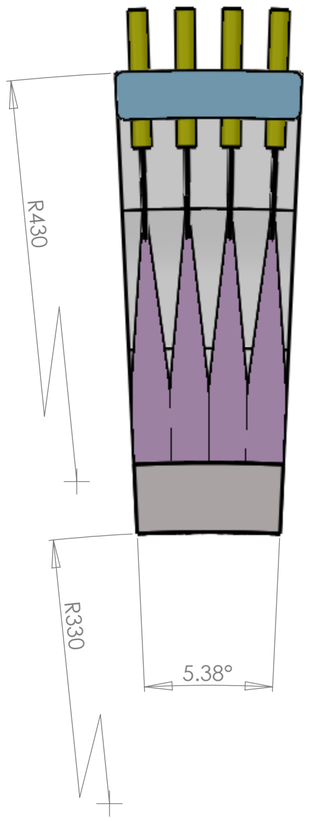

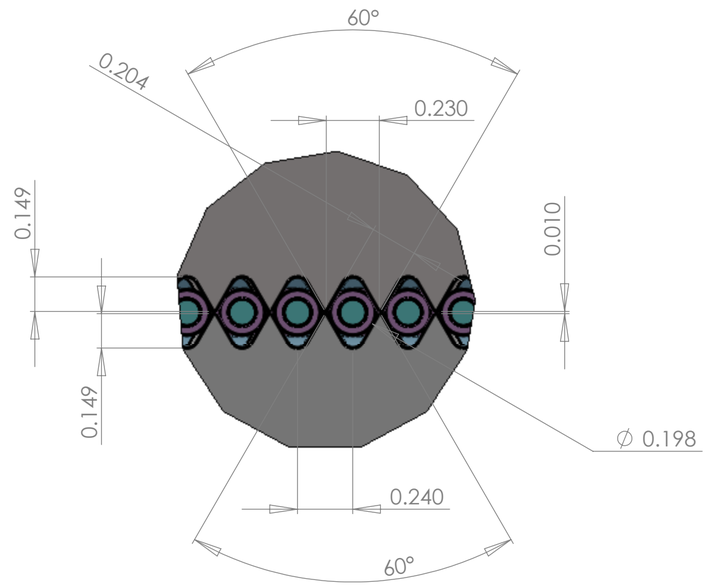

DETAIL B
SCALE 50 : 1

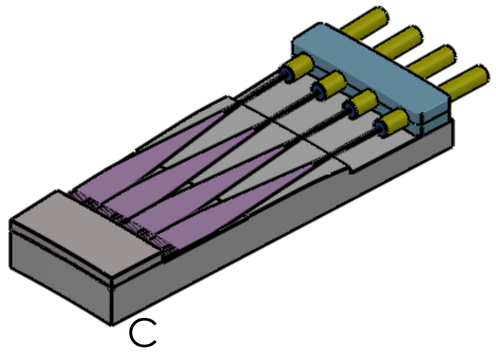

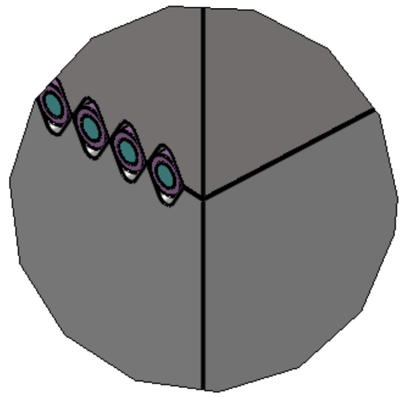

DETAIL C
SCALE 50 : 1

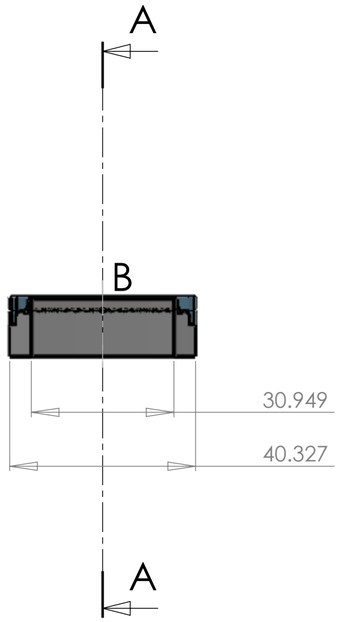

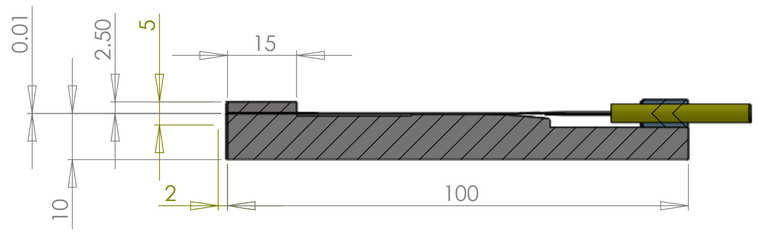

SECTION A-A

PROPRIETARY AND CONFIDENTIAL

THE INFORMATION CONTAINED IN THIS DRAWING IS THE SOLE PROPERTY OF <INSERT COMPANY NAME HERE>. ANY REPRODUCTION IN PART OR AS A WHOLE WITHOUT THE WRITTEN PERMISSION OF <INSERT COMPANY NAME HERE> IS PROHIBITED.

NEXT ASSY	USED ON	UNLESS OTHERWISE SPECIFIED: DIMENSIONS ARE IN MILLIMETERS TOLERANCES: FRACTIONAL ± ANGULAR: MACH ± BEND ± TWO PLACE DECIMAL ± THREE PLACE DECIMAL ±		NAME	DATE
			DRAWN	Lafever	9/2/11
			CHECKED		
			ENG APPR.		
			MFG APPR.		
		INTERPRET GEOMETRIC TOLERANCING PER:	Q.A.		
		MATERIAL	COMMENTS:		
		FINISH			
APPLICATION		DO NOT SCALE DRAWING			

BigBOSS

TITLE:

Slit-Plate BLANK workup

SIZE	DWG. NO.	REV
C	SlitModuleAssy-NoWindow300x12	A
SCALE: 1:1	WEIGHT:	SHEET 1 OF 1