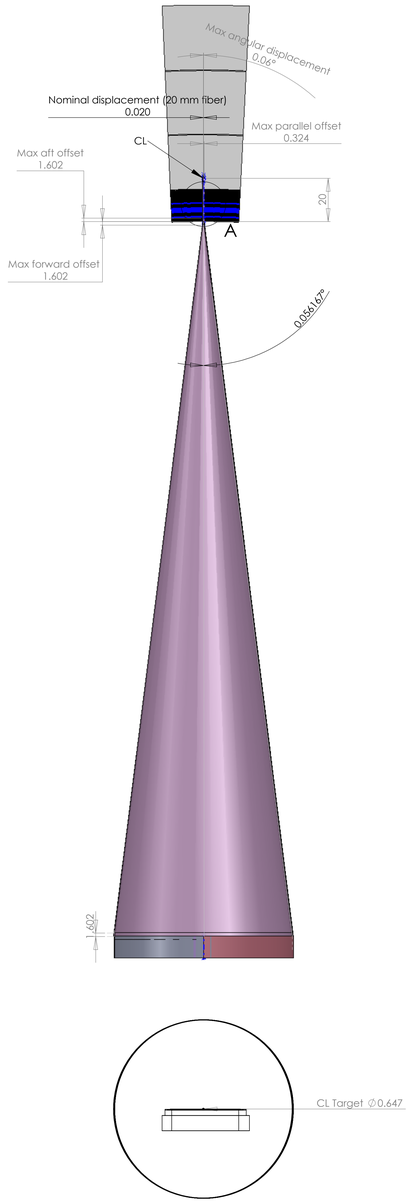

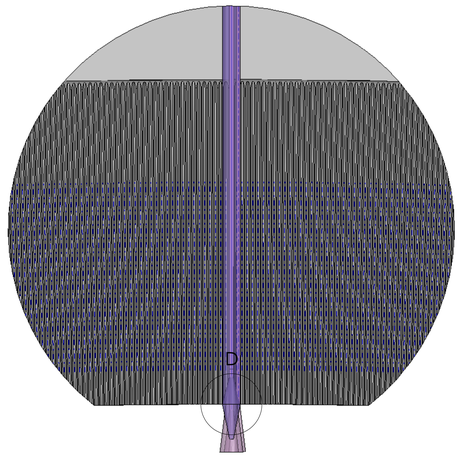

DETAIL A
SCALE 10 : 1

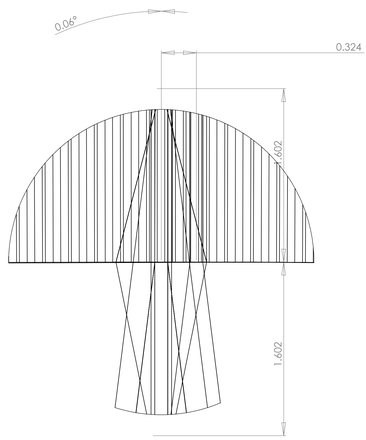

DETAIL D
SCALE 50 : 1

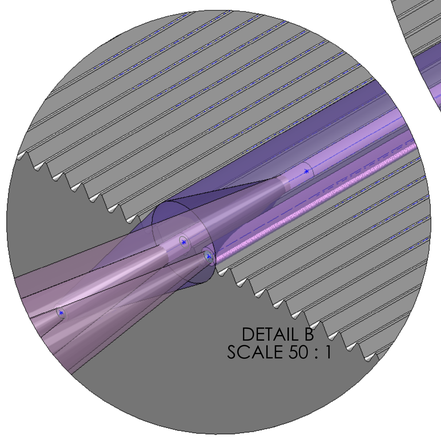

DETAIL B
SCALE 50 : 1

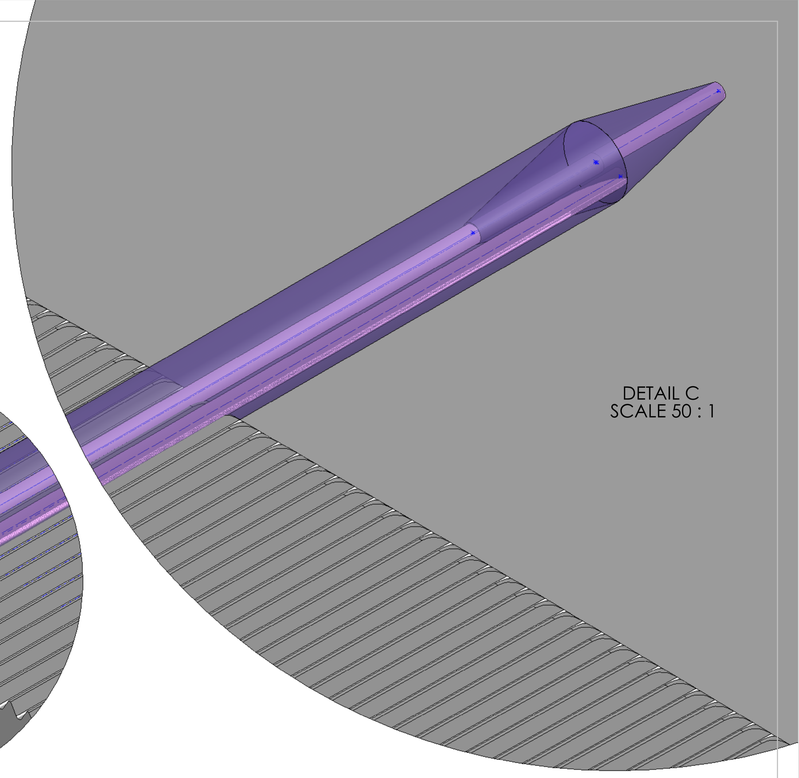

DETAIL C
SCALE 50 : 1

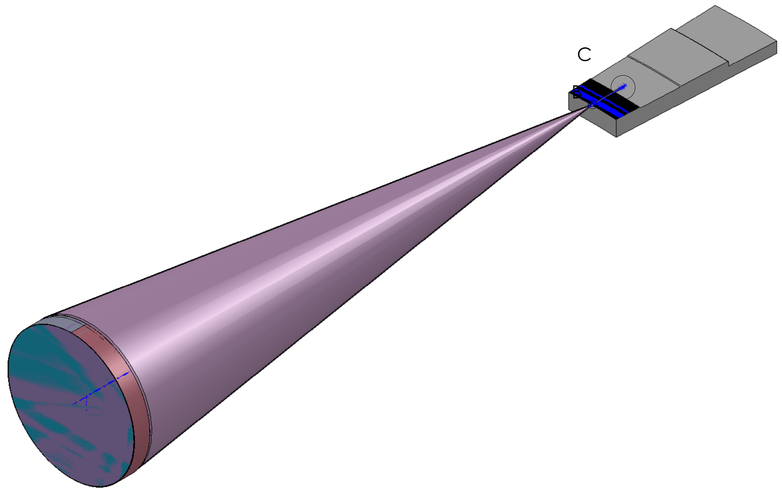

UNLESS OTHERWISE SPECIFIED: DIMENSIONS ARE IN MILLIMETERS SURFACE FINISH: TOLERANCES: LINEAR: ANGULAR:	FINISH:		DEBUR AND BREAK SHARP EDGES	DO NOT SCALE DRAWING	REVISION:
	NAME	SIGNATURE	DATE	TITLE:	
DRAWN					
CHK'D					
APPV'D					
MFG					
Q.A			MATERIAL:	DWG NO. OffsetStudy	A1
			WEIGHT:	SCALE:1:1	SHEET 1 OF 1