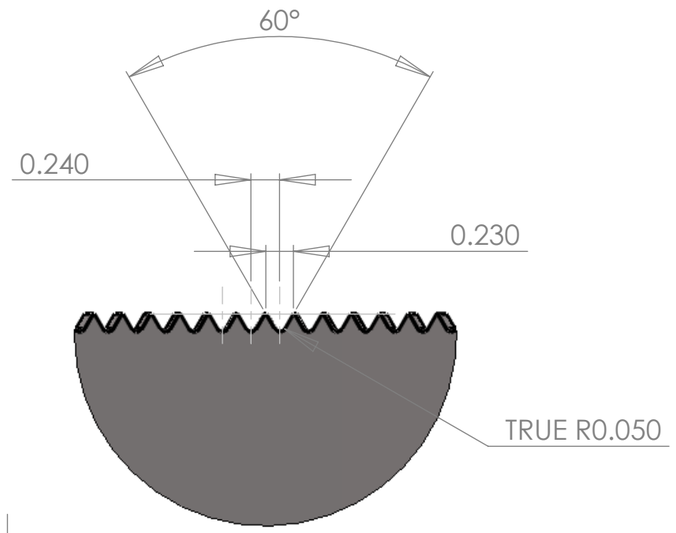

DETAIL B
SCALE 20 : 1

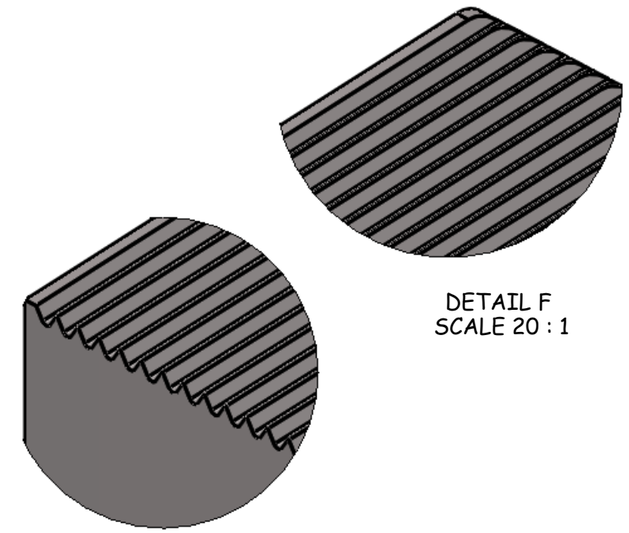

DETAIL F
SCALE 20 : 1

DETAIL C
SCALE 20 : 1

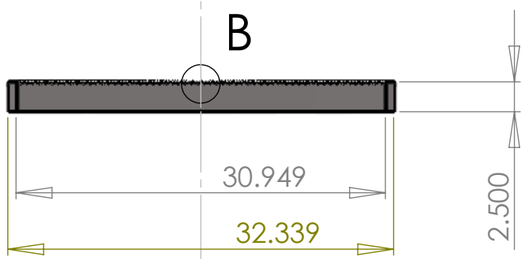

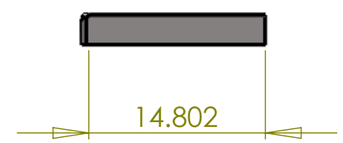

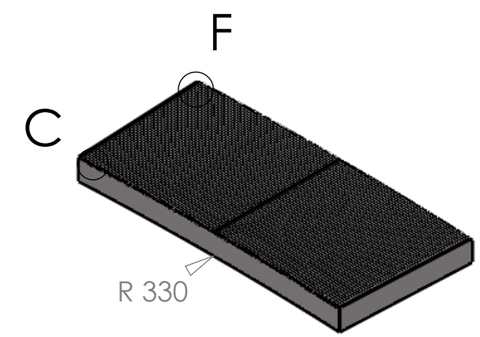

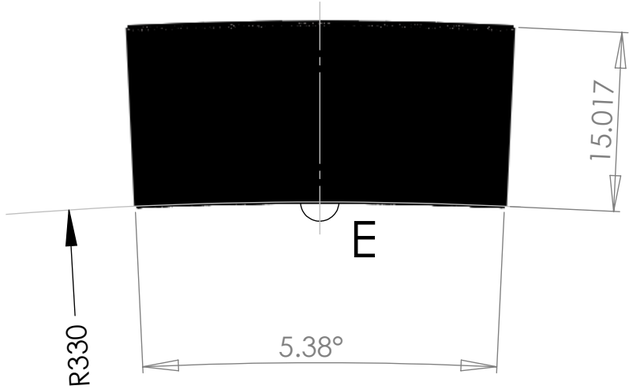

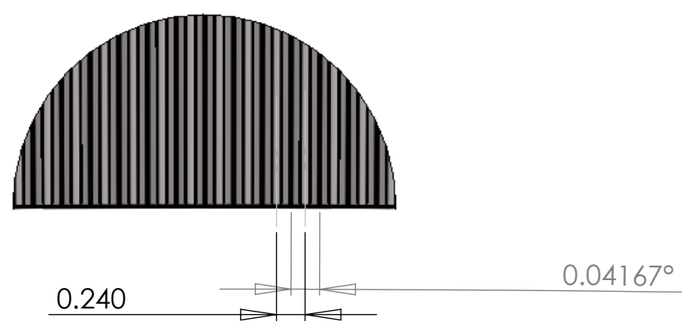

DETAIL E
SCALE 20 : 1

	NAME	DATE
DRAWN	Lafever	9/2/2011
CHECKED		
ENG APPR.		
MFG APPR.		
Q.A.		

COMMENTS:

DO NOT SCALE DRAWING

BigBOSS

TITLE:

Slit-Module Workup-300x128

SIZE	PART	REV
B	GrooveBlankcOVER-330	

SCALE: 2:1 | SHEET 1 OF 1