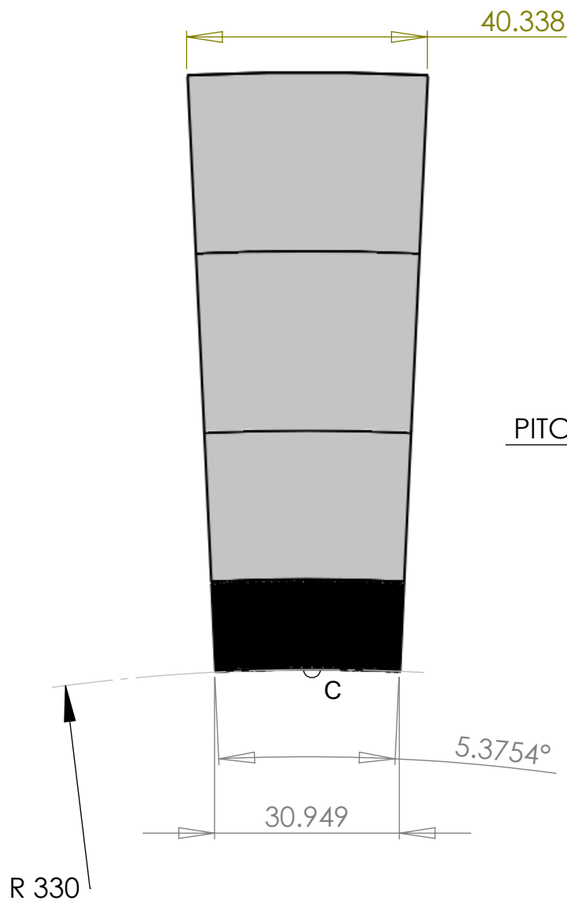

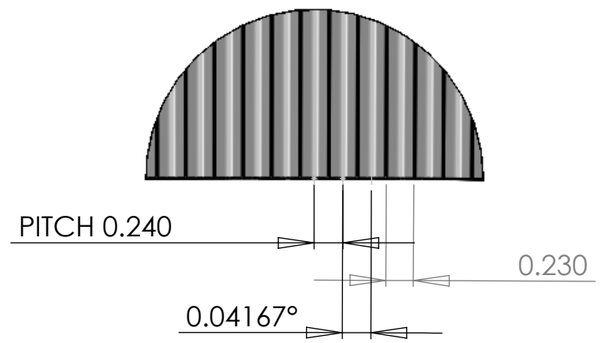

DETAIL C
SCALE 20 : 1

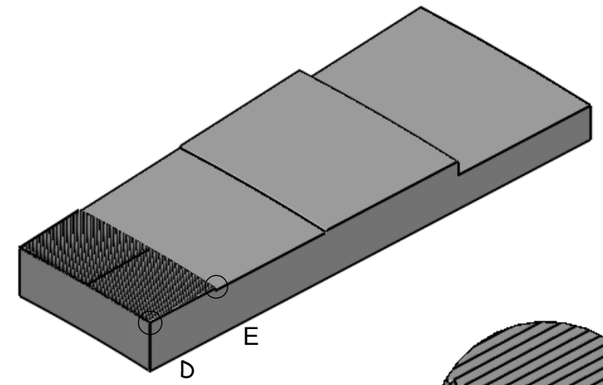

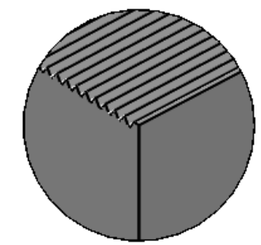

DETAIL D
SCALE 10 : 1

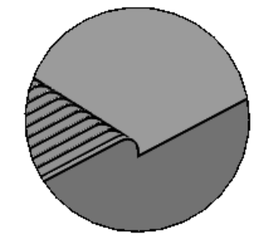

DETAIL E
SCALE 10 : 1

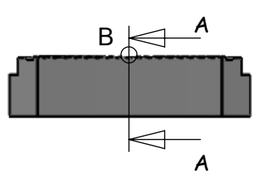

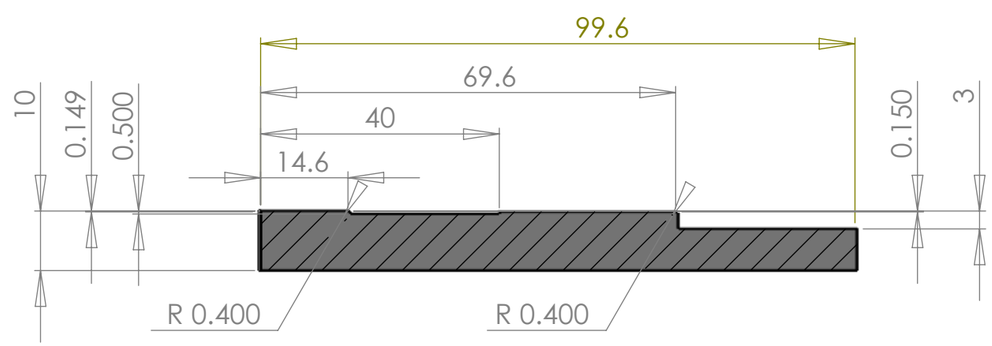

SECTION A-A

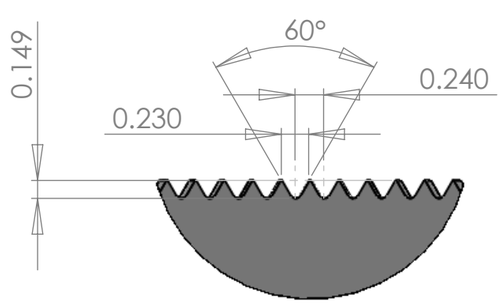

DETAIL B
SCALE 20 : 1

	NAME	DATE
DRAWN	Lafever	9/2/2011
CHECKED		
ENG APPR.		
MFG APPR.		
Q.A.		

All dimensions in millimeters

DO NOT SCALE DRAWING

BigBOSS

TITLE:

Slit-Module Workup-300x128

SIZE	PART	REV
B	GrooveBlank-330	

SCALE: 1:1 | SHEET 1 OF 1