REVISIONS				
ZONE	LTR	DESCRIPTION	DATE	APPROVED
	A	REVISED PER AURA APPD PRINT DATED 11-7-70 & REVISIONS TO 4 HUBS & PC NO 6	11/7/70	G.R.
	B	REV PER AURA PRINT 2-25-70	4/1/70	
H-7	C	"J" VIEW C-C: "FIN TO CLEAN UP" WAS 1/4 FIN, ADDED 3/8 & 1 1/4 DIMS, ADDED DWG. NO. REF DELETED 3, 4 & 5 1/2 REF DIMS.	3/12/71	JW
	D	ADDED VIEW H-H & GG ADDED KPNO FIN BRKT MTG HOLE LOCATIONS	4/13/72	LDS

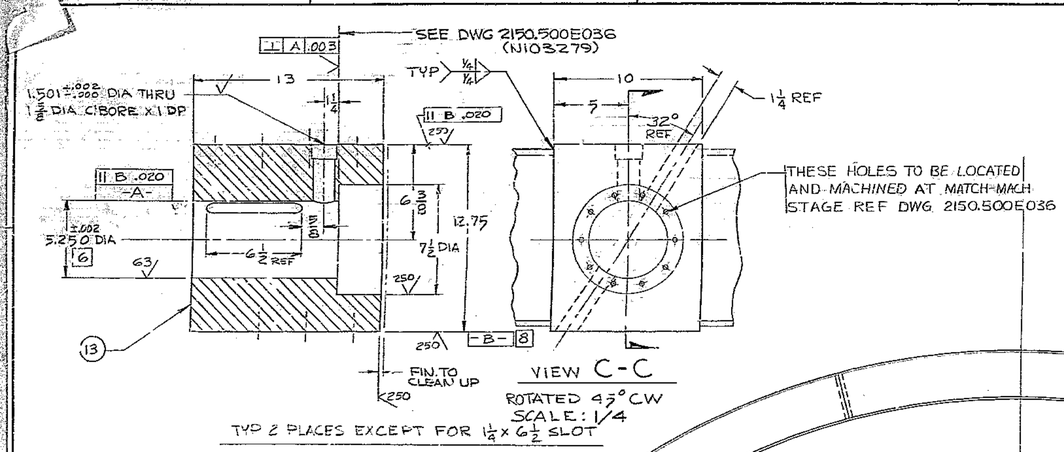

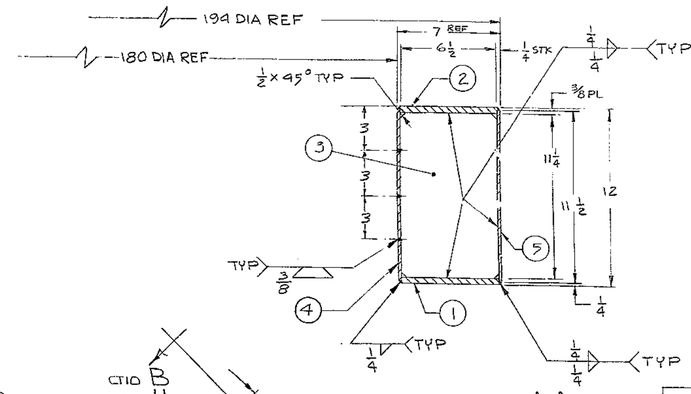

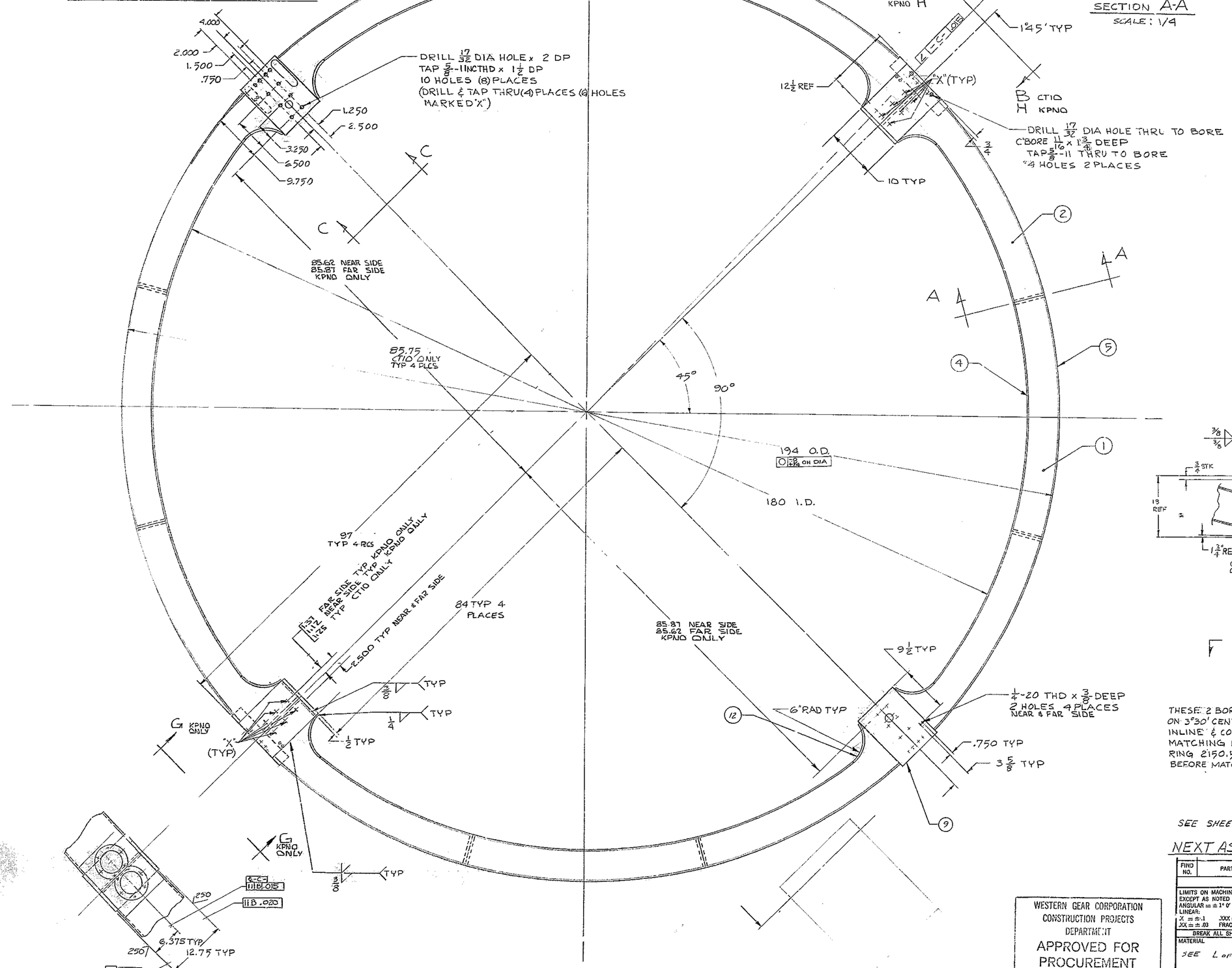

LIST OF MATERIAL				
PC NO.	QTY	DESCRIPTION	MATERIAL	WEIGHT
1	8	3/8 PL x 94 1/2 x 22 3/4 SEE SHT 2	ASTM A36, STL	
2	8	3/8 PL x 46 x 14 1/2 SEE SHT 2		
3	8	3/8 PL x 11 1/4 x 6 1/2		
4	4	1/4 PL x 11 1/2 x 125 1/2		
5	4	1/4 PL x 11 1/2 x 144 1/2		
6	2	3/4 PL x 11 1/4 x 10		
7	2	3/4 PL x 11 1/4 x 9 1/4		
8	2	3 x 11 1/4 x 14		
9	1	10 x 13 1/4 x 13 1/4		
10	4	1 1/4 PL x 6 x 12		
11	4	1 PL x 10 x 12 1/2	ASTM A36, STL	
12	8	1/4 PL x 11 1/2 x 10	ASTM A36, STL	
13	1	SEE DWG 2150.500B033	STL, ASTM A36 REF	

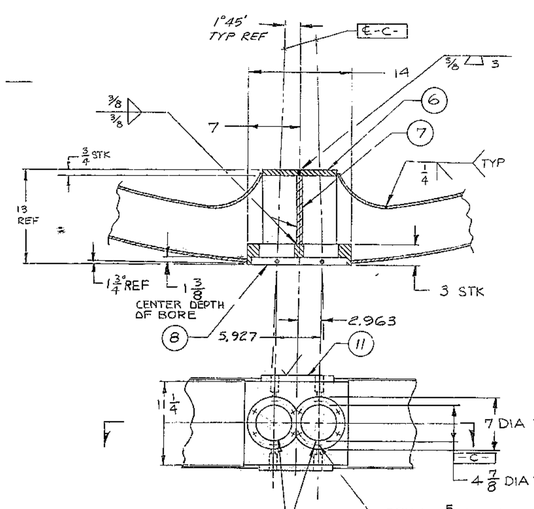

SEE SHEET 2 FOR NOTES

ASP FILE 1189

NEXT ASSY: 2150.500E002 (W.G. N102966)

FIND NO.	PART NO.	DESCRIPTION	QTY	MATERIAL	CODE IDENT
		LIST OF MATERIAL (LM)			

LIMITS ON MACHINED DIMENSIONS EXCEPT AS NOTED
ANGULAR = ± 1° 0'
LINEAR:
X = ±.1 XXX = ±.010
XX = ±.03 FRACTIONAL = ±1/32
BREAK ALL SHARP EDGES
MATERIAL
SEE L of M

150" STELLAR TELESCOPE MTG

DRAWN J. G. RUVER 12-18-69
CHECK
ENGR

W.G. N103278
APPROVED

Western Gear Corporation — HEAVY MACHINERY DIVISION, EVERETT, WASHINGTON

INNER RING
UPPER RING AND SECONDARY ASSY

SIZE E | CODE IDENT NO. 16603 | 2150.500E020 | REV D

SCALE 1/8" WT | LB | SHEET 1 OF 2

WESTERN GEAR CORPORATION
CONSTRUCTION PROJECTS DEPARTMENT
APPROVED FOR PROCUREMENT
Gene Russo DATE 11/13/70