Chapter 5: The BigBOSS Instrument

An Overview

Chris Bebek

10 February 2011

Review Highlights

The Ground-Based Stage IV BAO Experiment
BigBOSS

On the significance and feasibility of the instrument and software design, the review panel found

- "The **fundamental approach to the instrument is sound**, but at the detailed level there are numerous concerns that should and can be addressed before Conceptual Design Review."
- "We think that all the **instrument sub-systems of the types proposed can be built**. The **design is approaching CoDR level**, and at this point the proposed subsystems appear feasible. "
- "The review panel was **concerned there did not appear to be a set of technical requirements directly derived from the science and operations requirements** that have guided the instrument design parameters and choices. '

BigBOSS at the Mayall 4-m

The Ground-Based Stage IV BAO Experiment
BigBOSS

- Replace existing entire prime focus instrument cage with new corrector and fiber actuator focal plane.
- Route fibers down Serrurier structure, through telescope yoke and deliver to spectrographs.
- Install new spectrographs in Coude room
- Provide instrument readout, control and telescope interface electronics.

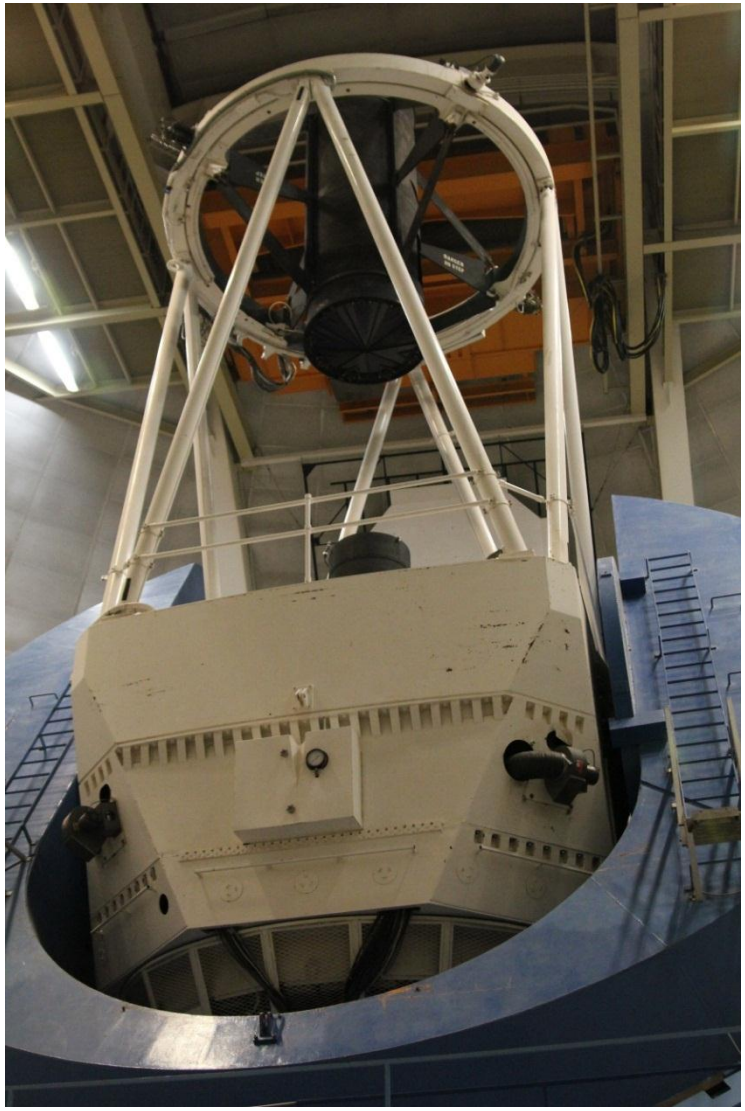

Corrector

The Ground-Based Stage IV BAO Experiment
BigBOSS

- 3 degree field at the focal plate to 5000 fibers on 12 mm pitch.
- Tip-tilt-focus compensation mechanism.
- Atmospheric chromatic dispersion compensator.
- Mount for fiber view camera.
- Mount for f/8 secondary mirror – Cass instruments.

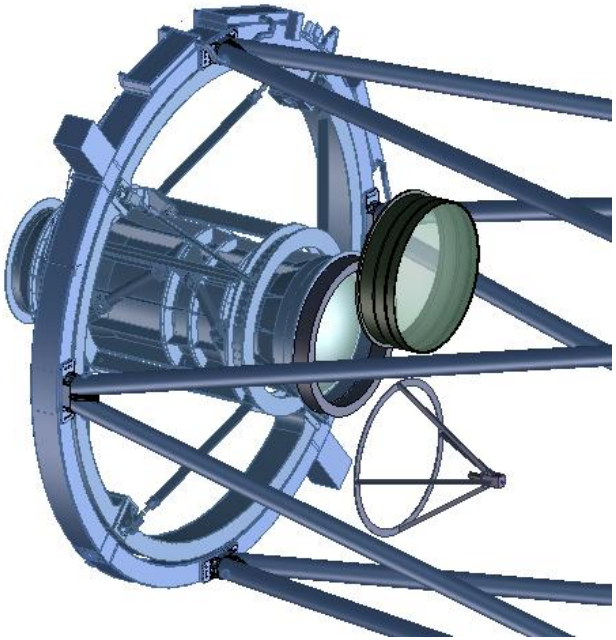

Thanks to FNAL DEC group for Blnaco 4-m mechanical model

Focal Plane

The Ground-Based Stage IV BAO Experiment
BigBOSS

- Mounts 5000 fiber positioners
  - Power supply
  - Wireless communication
  - Heat removal
- Guide sensors
- Focus sensors
- Backlit fiducials fibers for the fiber view camera

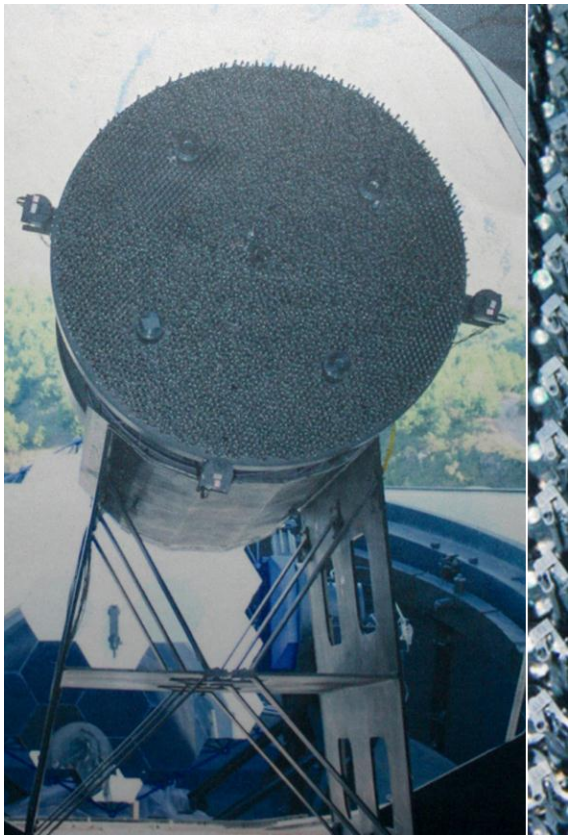

LAMOST

Fiber System

- Positioners
- Fiber optic strands
- Fiber optic bundles
- Fiber optic bundle connectors
- Spectrograph slit arrays

WFMOS illustration

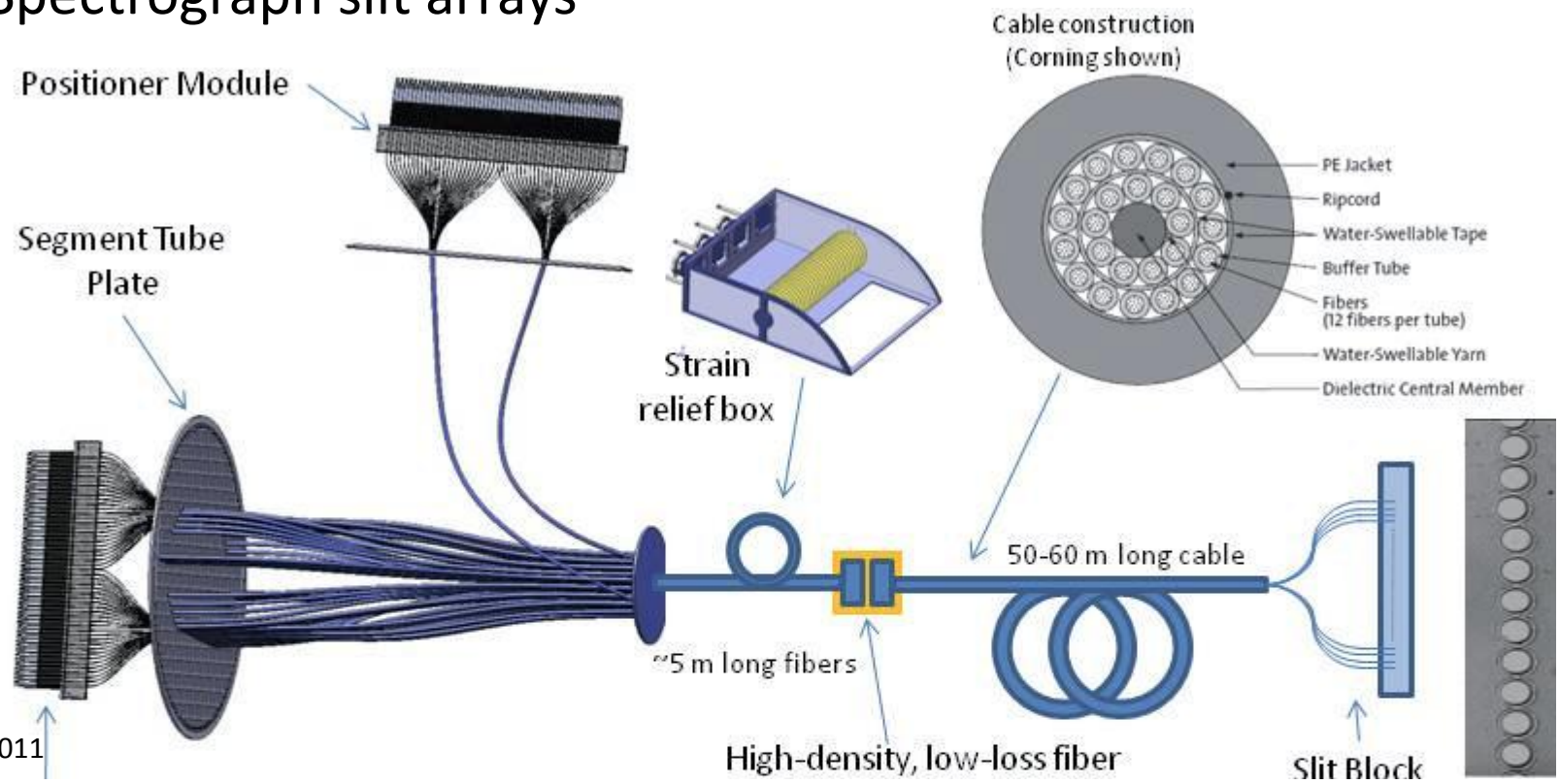

Positioners

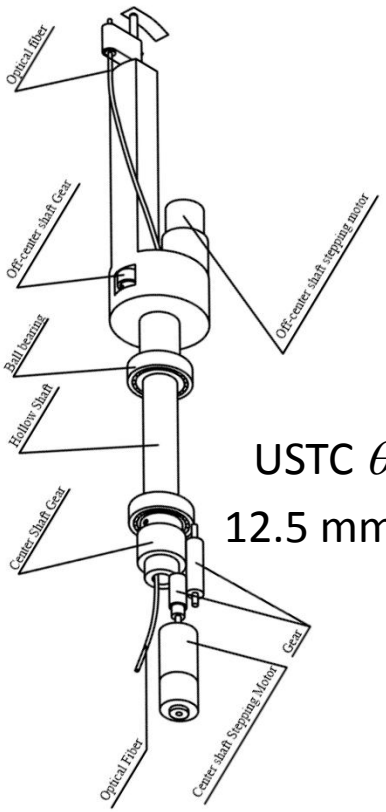

USTC θ-θ

12.5 mm pitch

Spain SIDE θ-θ

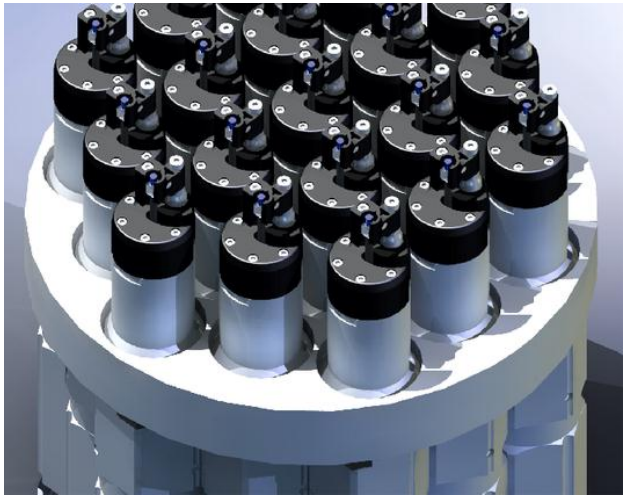

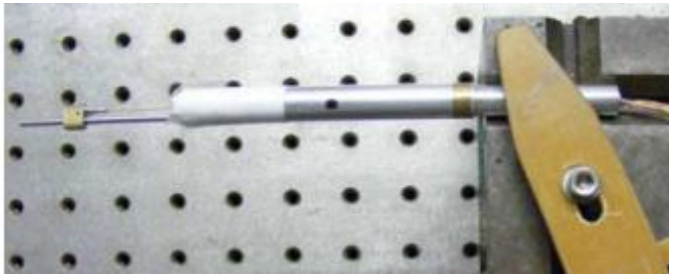

WFMOS Cobra θ-θ

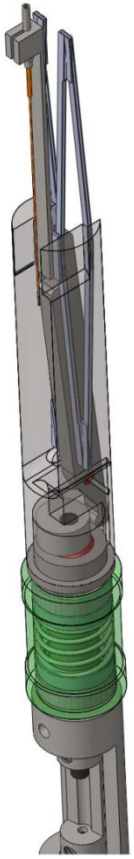

LBNL r-θ

12 mm pitch

Positioners

The Ground-Based Stage IV BAO Experiment
BigBOSS

- USTC has made a 12.5 mm pitch actuator.
  - We lack detailed performance data
    - Positioning time
    - Positioning tolerance
    - Power dissipation
  - We lack detailed requirements to score it against.
- Spain effort underway – build on their SIDE experience
- LBNL exploring r-θ with brushless motors for speed, low power, simplicity of fiber positioning
- Reviewer comments
  - Heat loading from the 2kW of power pulsed – suggest doing an experiment.
  - A fundamental choice in fiber positioned spacing must be made soon.
  - Can the fibers stay on target across the field of view when at large Zenith angles?
  - Does the fiber positioner need a rotation stage to track the field or for final alignment on the field?

Fibers

The Ground-Based Stage IV BAO Experiment
BigBOSS

- Baseline 120 μm BOSS-like fiber
- Individual fiber termination at positioner end
- Packaged into bundles
- Possible use of connectors
- Terminate in slit array

Durham - single fiber ferrule termination

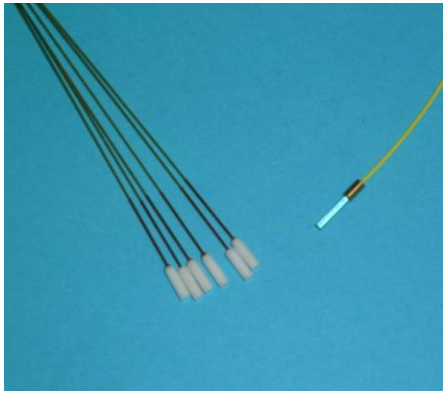

FMOS cable bundle

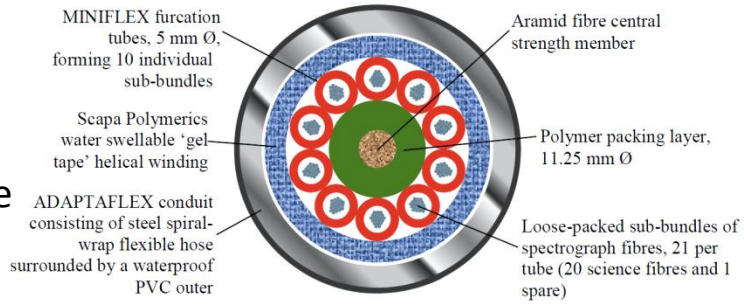

APPOGEE connector cell

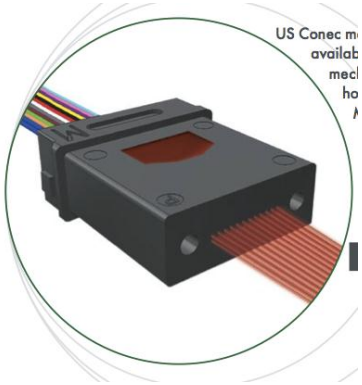

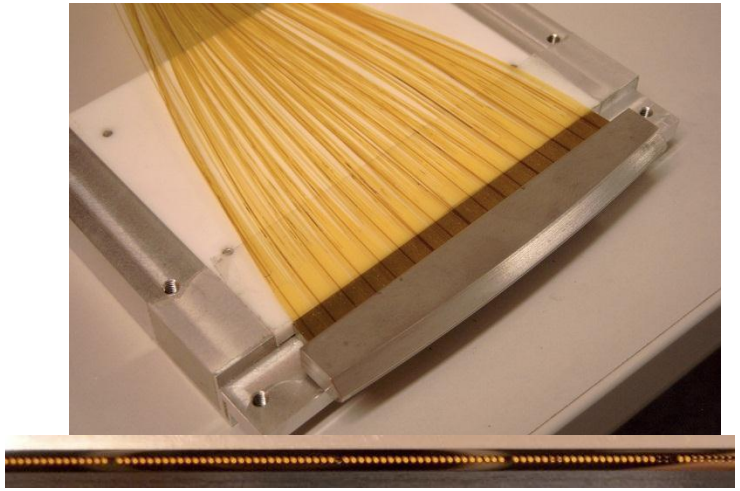

VIRMOS slit array

Fibers

The Ground-Based Stage IV BAO Experiment
BigBOSS

- My observation
  - A lot of existing work in all these areas
  - Can be and has been industrialized
  - We are actively gathering data
- Reviewers comments
  - Why fiber connectors? However, the implementation of connectors does introduce advantages in testing, maintenance, and for future upgrade paths with the facility.
  - What is the allowable breakage or fraction of non-usable fibers before the science objectives are compromised?
  - What is the science impact in the blue if 40 meters of fiber are actually required?

Fiber Routing

The Ground-Based Stage IV BAO Experiment
BigBOSS

- Notions

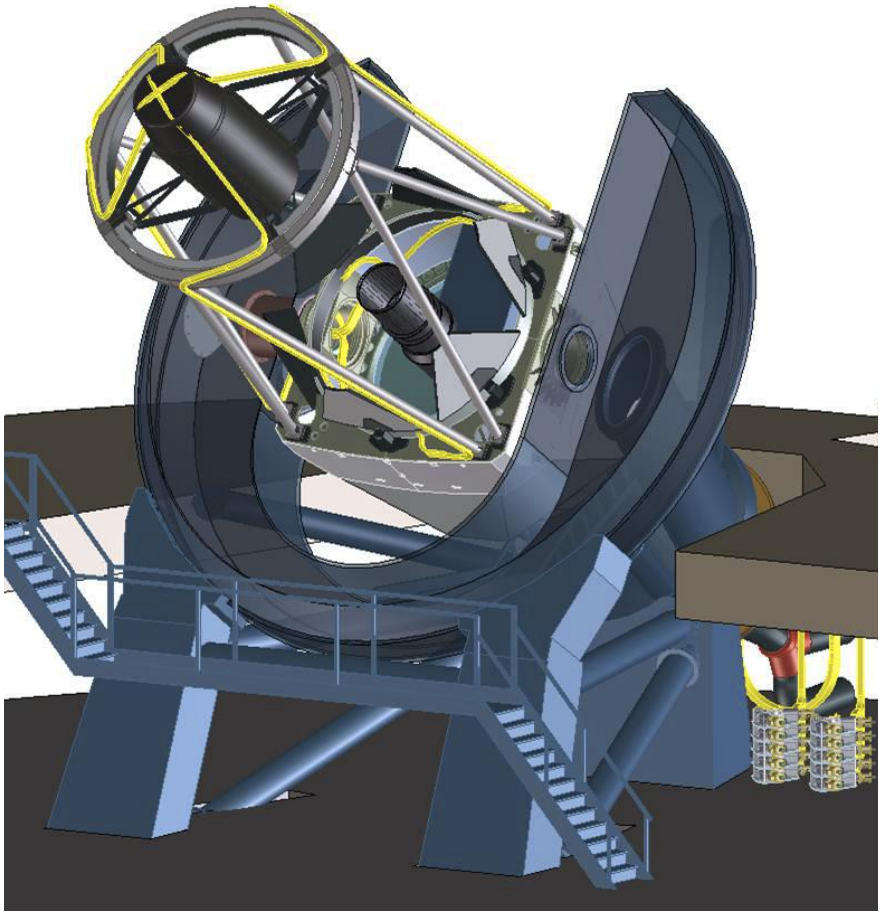

Spectrograph

The Ground-Based Stage IV BAO Experiment
BigBOSS

- Receive 500 fibers each (x10 systems)
- Split into 3 band from 360nm – 1060nm) using dichroics
- R ~3000-4000
- Dispersion with VPH gratings
- Deliver spectra to band-optimized 4kx4k CCDs
- System to back-illuminate fibers

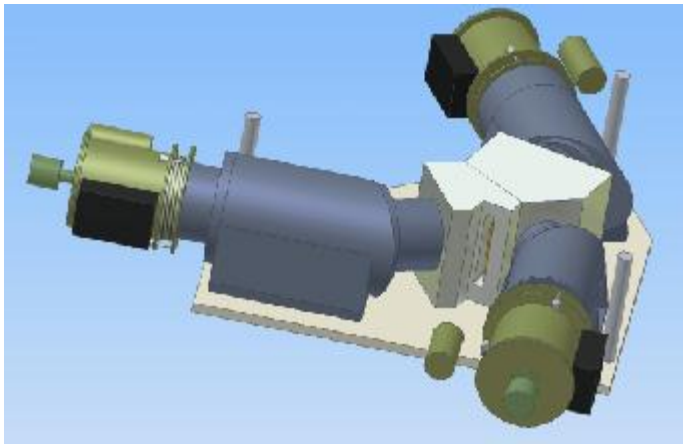

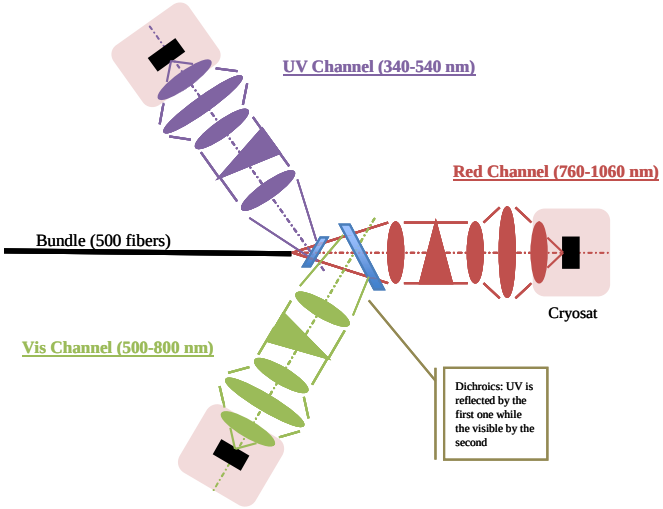

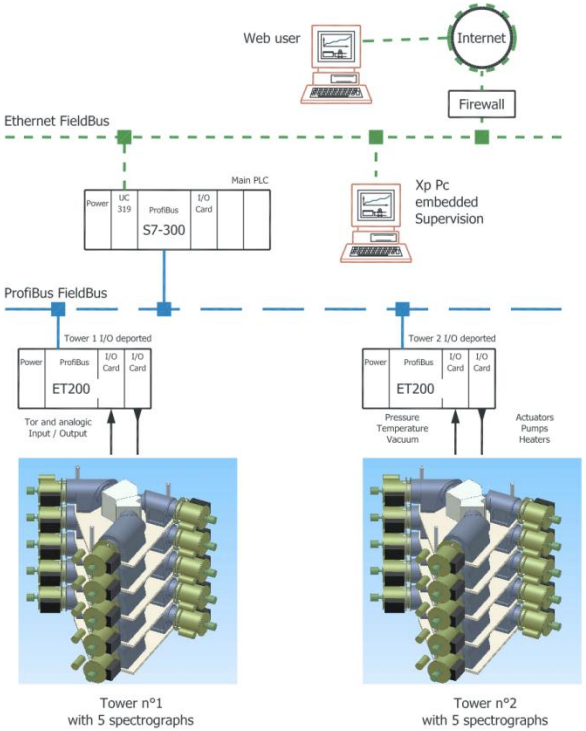

Spectrograph

The Ground-Based Stage IV BAO Experiment
BigBOSS

Reviewer comments

- Dichroics
  - in the diverging light cone will introduce aberrations (astigmatism).
  - the thickness was kept very thin to minimize this -- application of multi-layer coatings often stresses and deforms the glass surface.
- No mention of vignetting within the corrector or the spectrograph.
- How will the Littrow recombination ghost of the VPH gratings be handled?
- CCD flatness error does not appear to be included in the image quality analysis.
- Reliability of the detector cooling is important as loss of a spectrograph affects the window function.
- Electronic cross talk between the CCD controllers can affect low signal-to-noise level observing, but it can be designed out with due care.

Conclusion

The Ground-Based Stage IV BAO Experiment
BigBOSS

- Overall view of reviewer comments
  - Technical comments are easily addressed.
  - A recurrent theme is “where is the science requirements flow down to the instrument and does the design meet them.”
  - Need a well defined and documented interface with NOAO facilities.
  - Mike Sholl will pick up on review comments for systems that I didn’t cover.
- BigBOSS is close to being buildable today. What we build needs technical requirements linked to a requirements flow down from science.