BigBOSS

Actuator Clamping Unit

Christoph Schenk

01/19/2011

Clamping Concept

- Clamping units (3 actuators each unit) mounted on backside of focal plane
- Loose fit bore-holes allows for backside insertion of actuators
- Clamping force generated by a conical screw head and tapered mating surface
- Regular pattern M1.6 threads for mounting screw / conical bolts (and center pins)

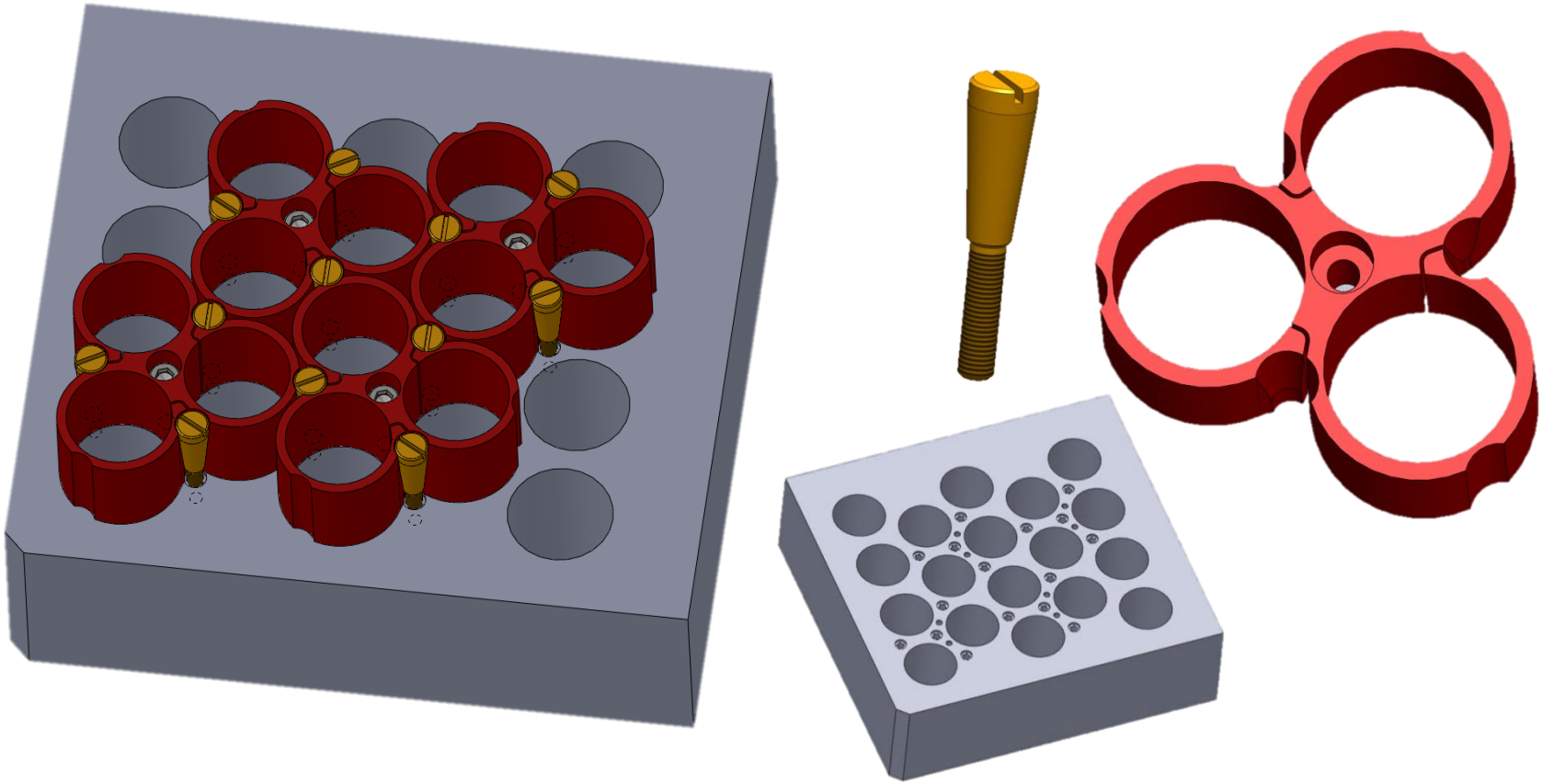

Technical Data and calculations

- Pitch: 12 mm; height: 10 mm; material: aluminum
- Thickness of flexure hinge: 0.3 mm
- Taper angle: 5°
- Stroke of clamping lever approx. 90 um / mm screw-in depth of bolt and 50 um / N
- Displacement of cone-supporting opposite ring 1.3 um / N
- Stress (von Mises) approx. 0.8 MPa / um lever stroke
- Required bolting torque: 0.1 Nmm / N clamping force (rough estimation)
- Max. achievable clamping force: 600 N (rough estimation)

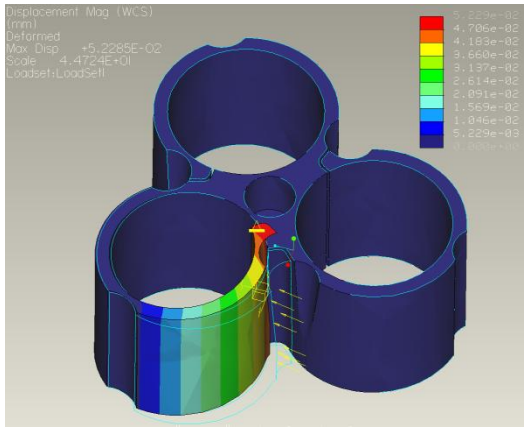

Displacement

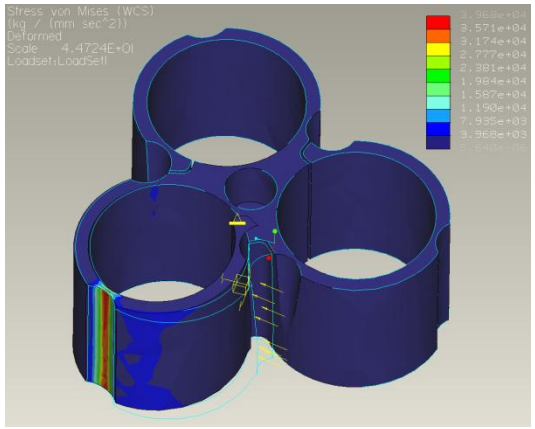

Stress von Mises

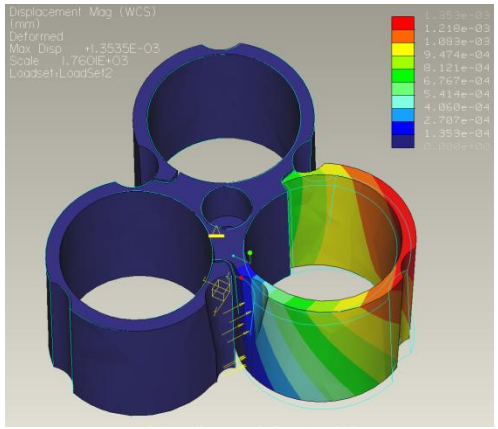

Displacement