2nd Pass

Phase Rotation Solenoid / Induction Accelerator

W orkup 01/2000

Intercell

Robin Lafever
Dave Vanecek
Simon Yu
Mike Green
Jim Fockler

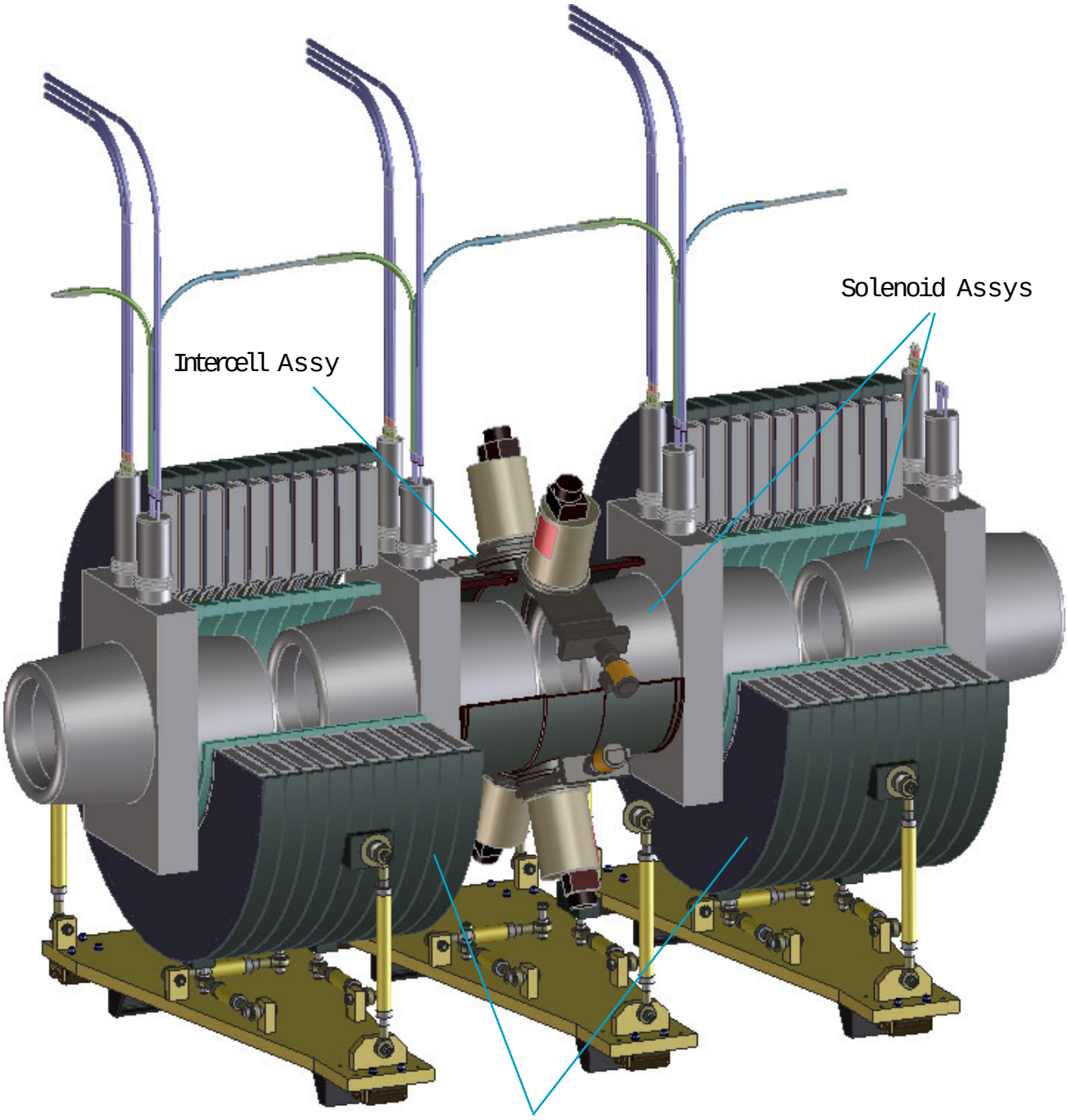

Download this Image from: http://www-eng.lbl.gov/~lafever/PRA/Fitup_1/AAAA.html

2nd Pass

Phase Rotation Solenoid / Induction Accelerator

W orkup 01/2000

Cell / Intercell / Cryostat Cutaway

Robin Lafever
Dave Vanecek
Simon Yu
Mike Green
Jim Fockler

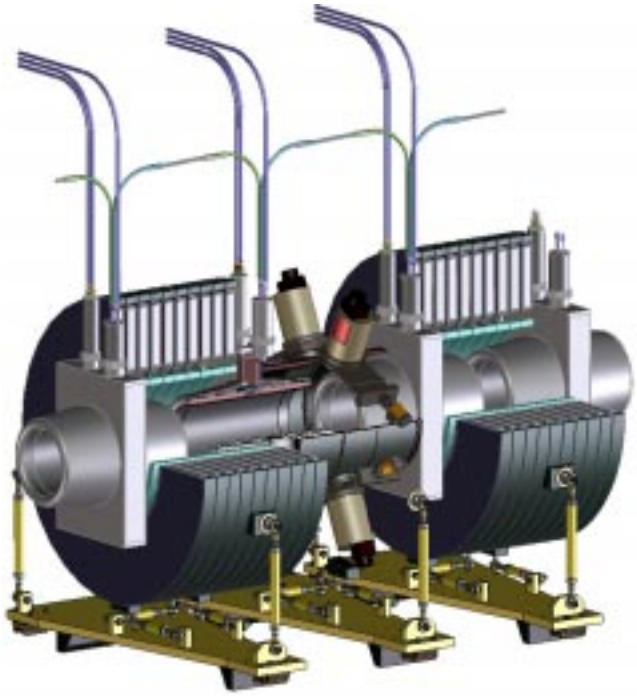

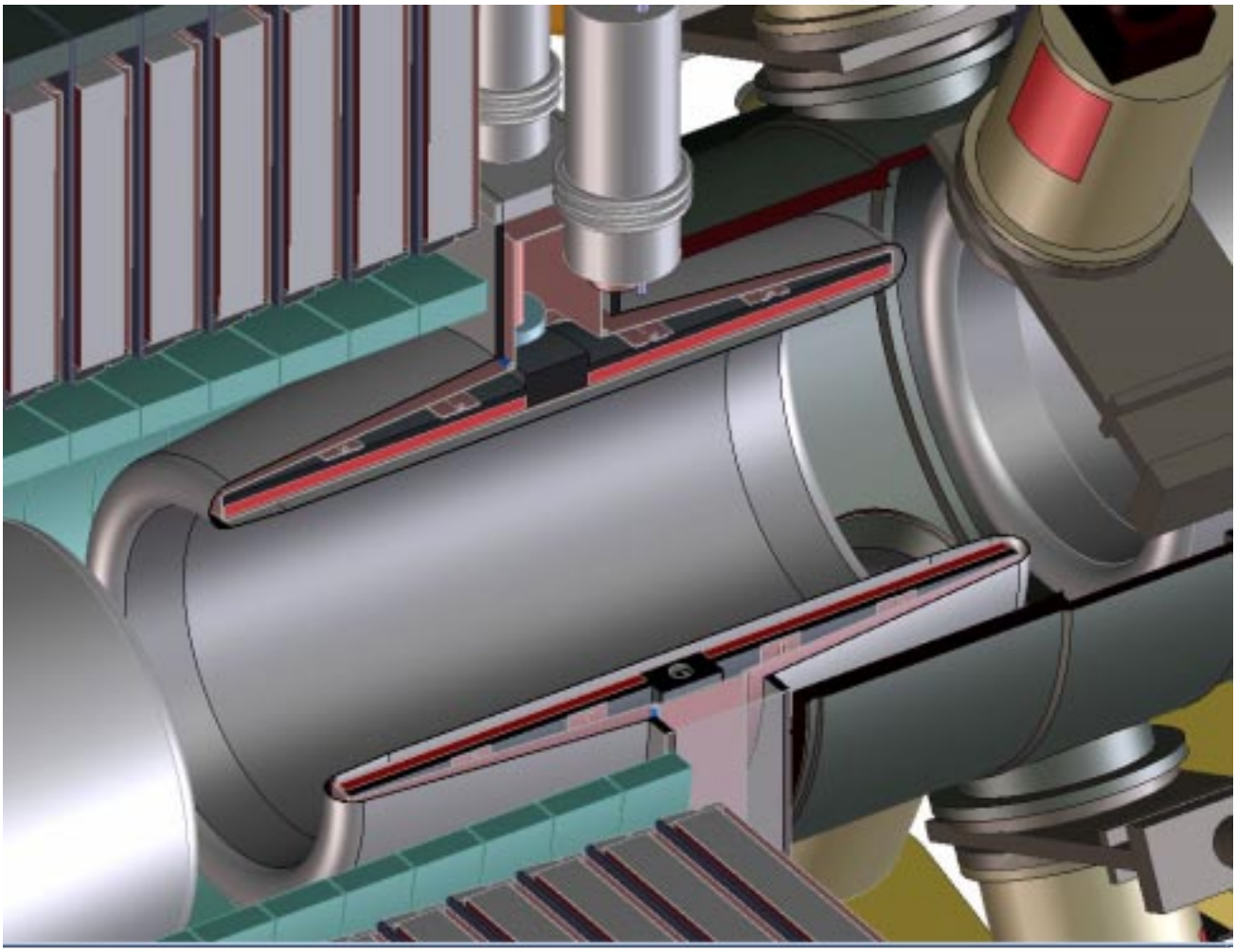

Download this Image from: http://www-eng.lbl.gov/~lafever/PRA/Fitup_1/AAAA.html

2nd Pass

Phase Rotation Solenoid / Induction Accelerator

W orkup 01/2000

Cell / Cryostat Cutaway

Robin Lafever
Dave Vanecek
Simon Yu
Mike Green
Jim Fockler

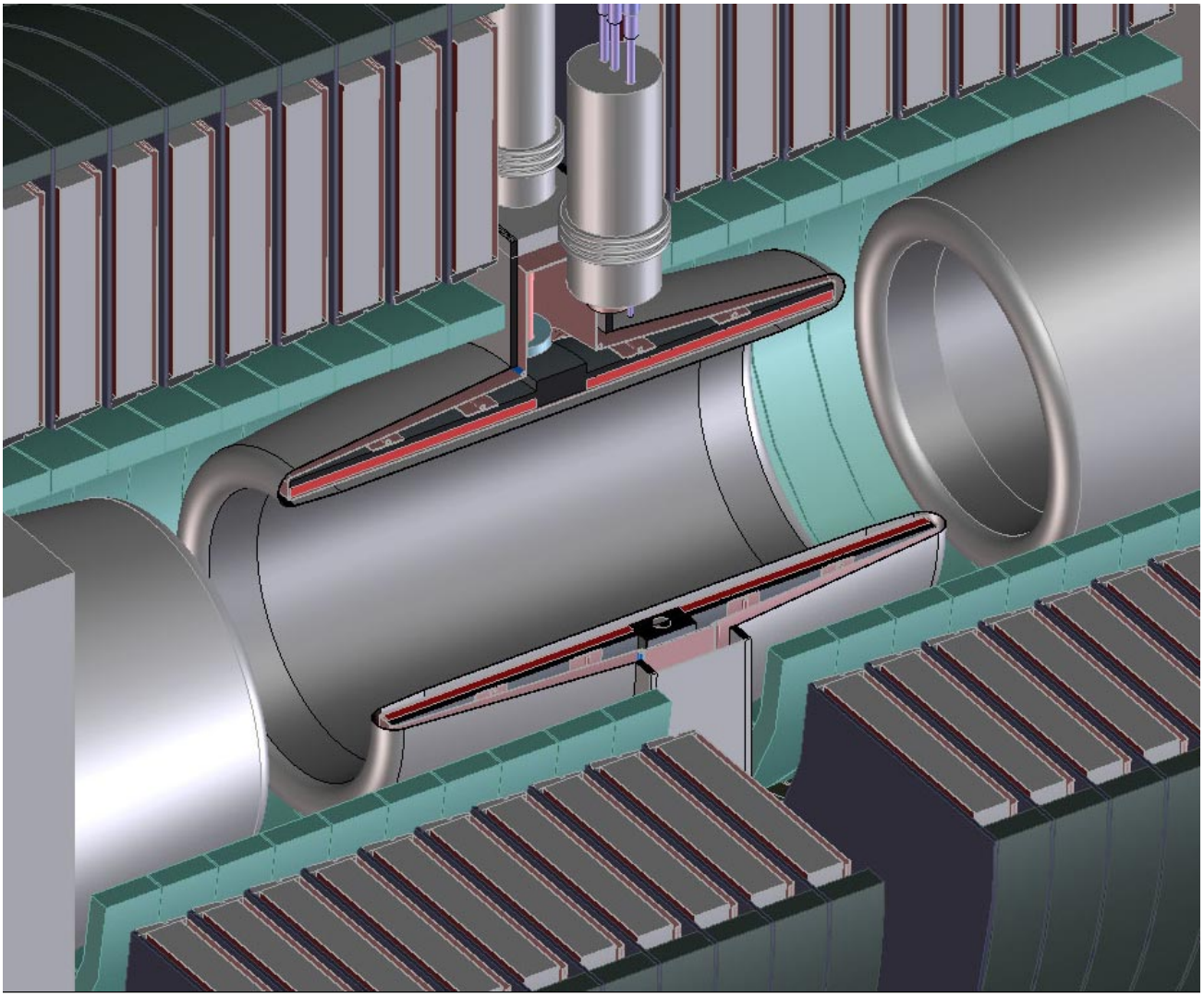

Download this Image from: http://www-eng.lbl.gov/~lafever/PRA/Fitup_1/AAAA.html

2nd Pass

Phase Rotation Solenoid / Induction Accelerator

W orkup 01/2000

Cell / Cryostat Cutaway

Robin Lafever
Dave Vanecek
Simon Yu
Mike Green
Jim Fockler

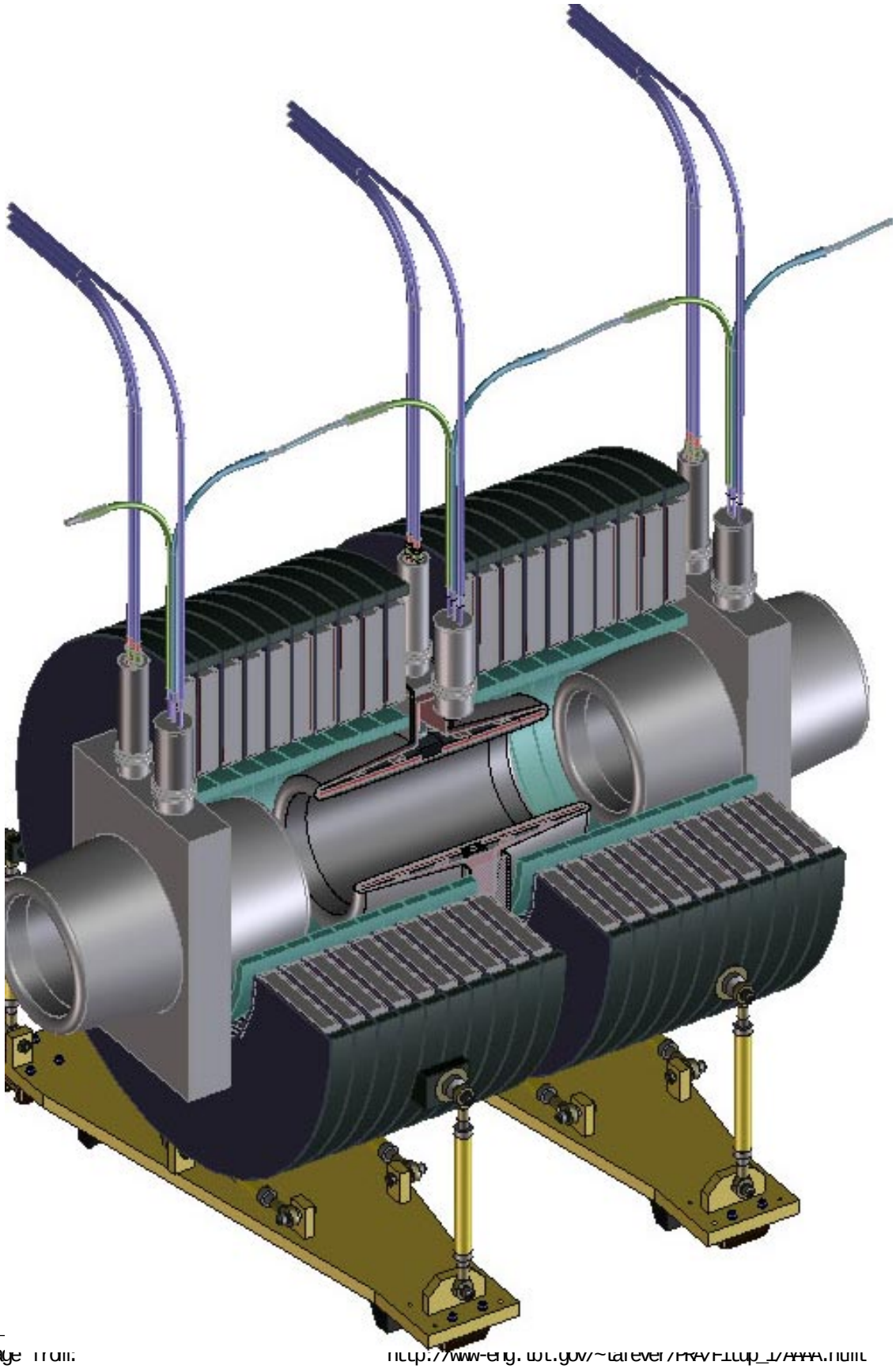

Download this Image from: http://www-eng.lbl.gov/~lafever/RAVFtop_1/AAAA.html

2nd Pass

Phase Rotation Solenoid / Induction Accelerator

W orkup 01/2000

Cell / Intercell Fitup

Robin Lafever
Dave Vanecek
Simon Yu
Mike Green
Jim Fockler

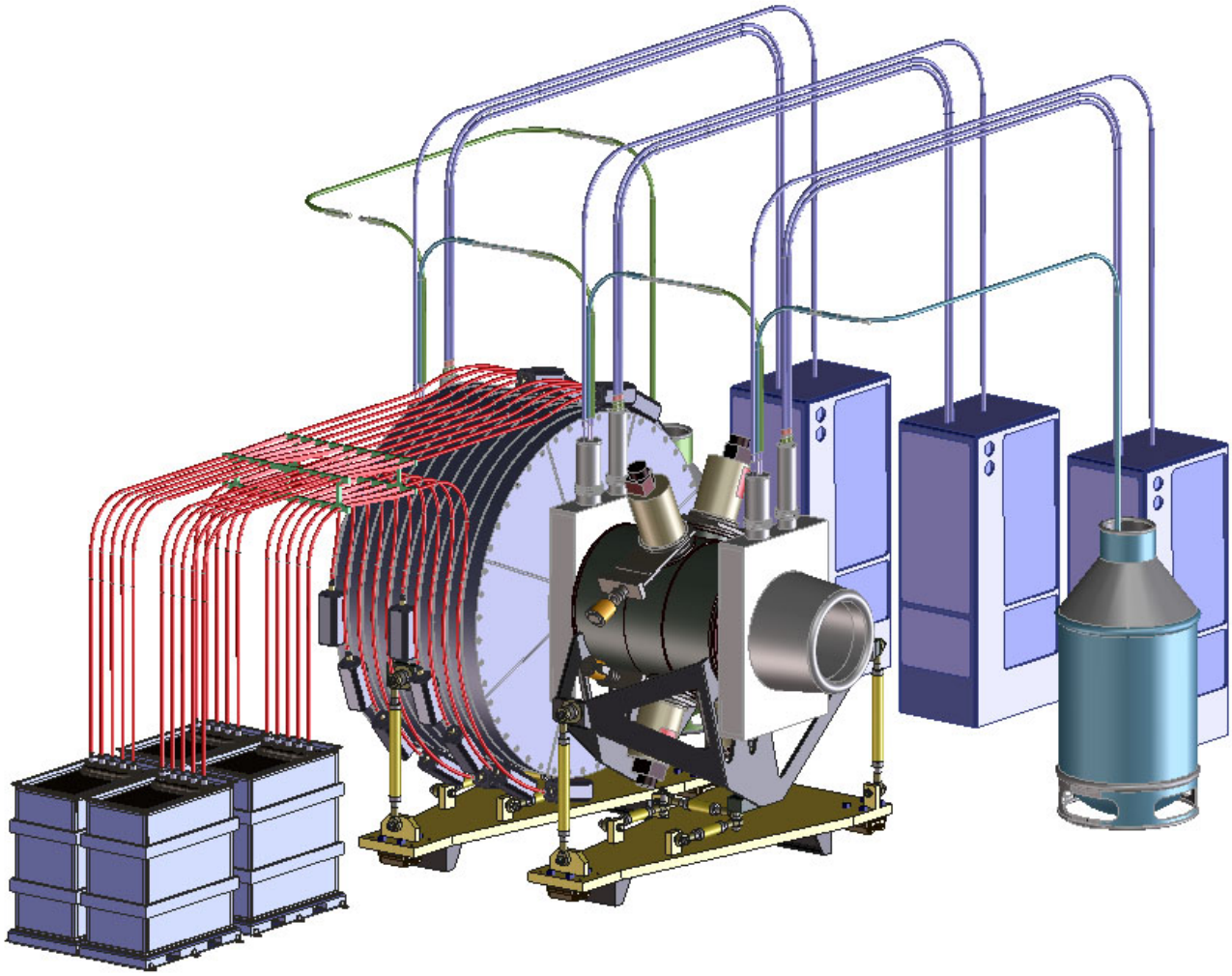

Download this Image from: http://www-eng.lbl.gov/~lafever/PRA/Fitup_1/AAAA.html

2nd Pass

Phase Rotation Solenoid / Induction Accelerator

W orkup 01/2000

Cell / Intercell Fitup

Robin Lafever
Dave Vanecek
Simon Yu
Mike Green
Jim Fockler

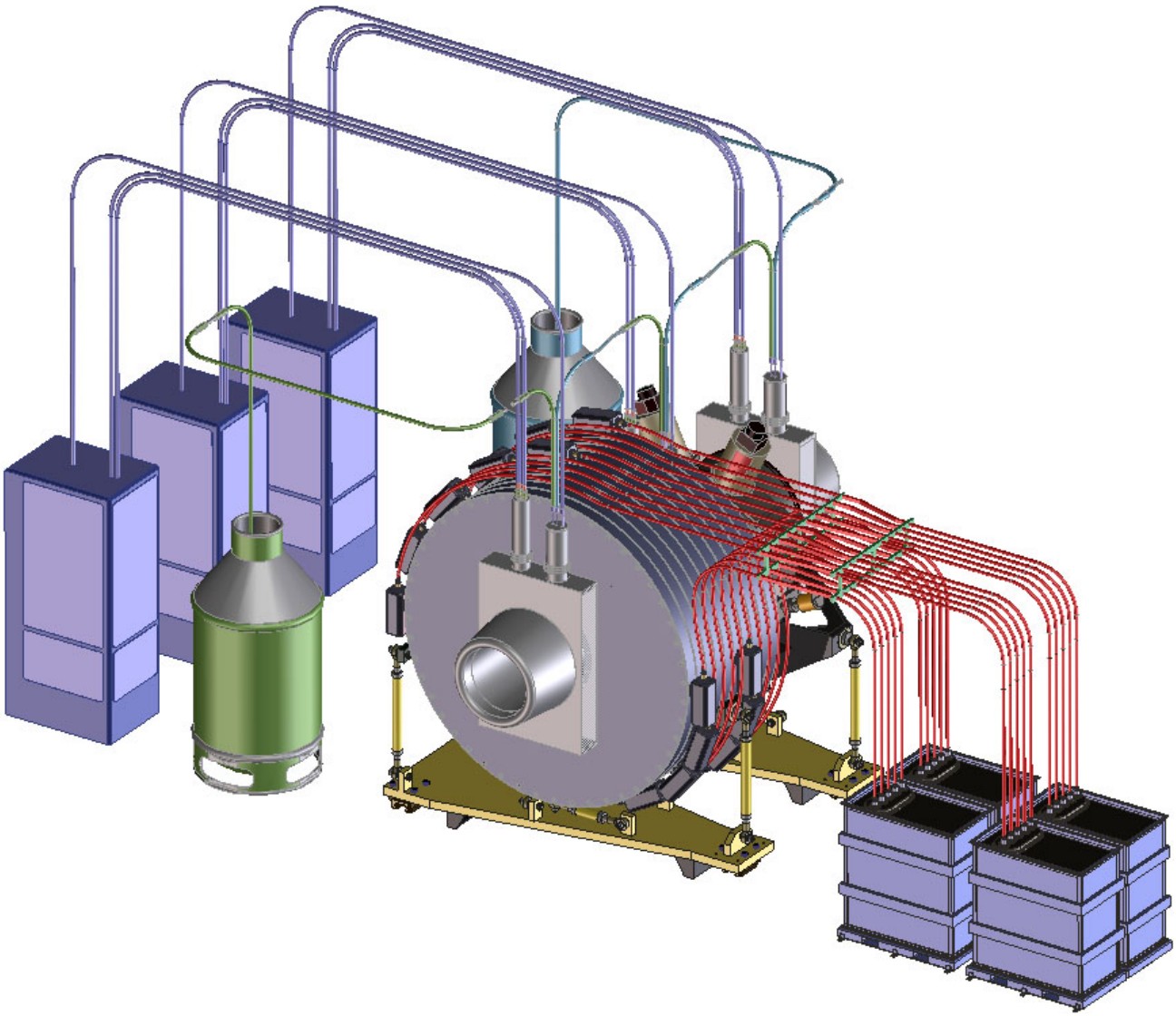

Download this Image from: http://www-eng.lbl.gov/~lafever/PRA/Fitup_1/AAAA.html

2nd Pass

W orkup 01/2000

Solenoid Cryo Assembly

Solenoids

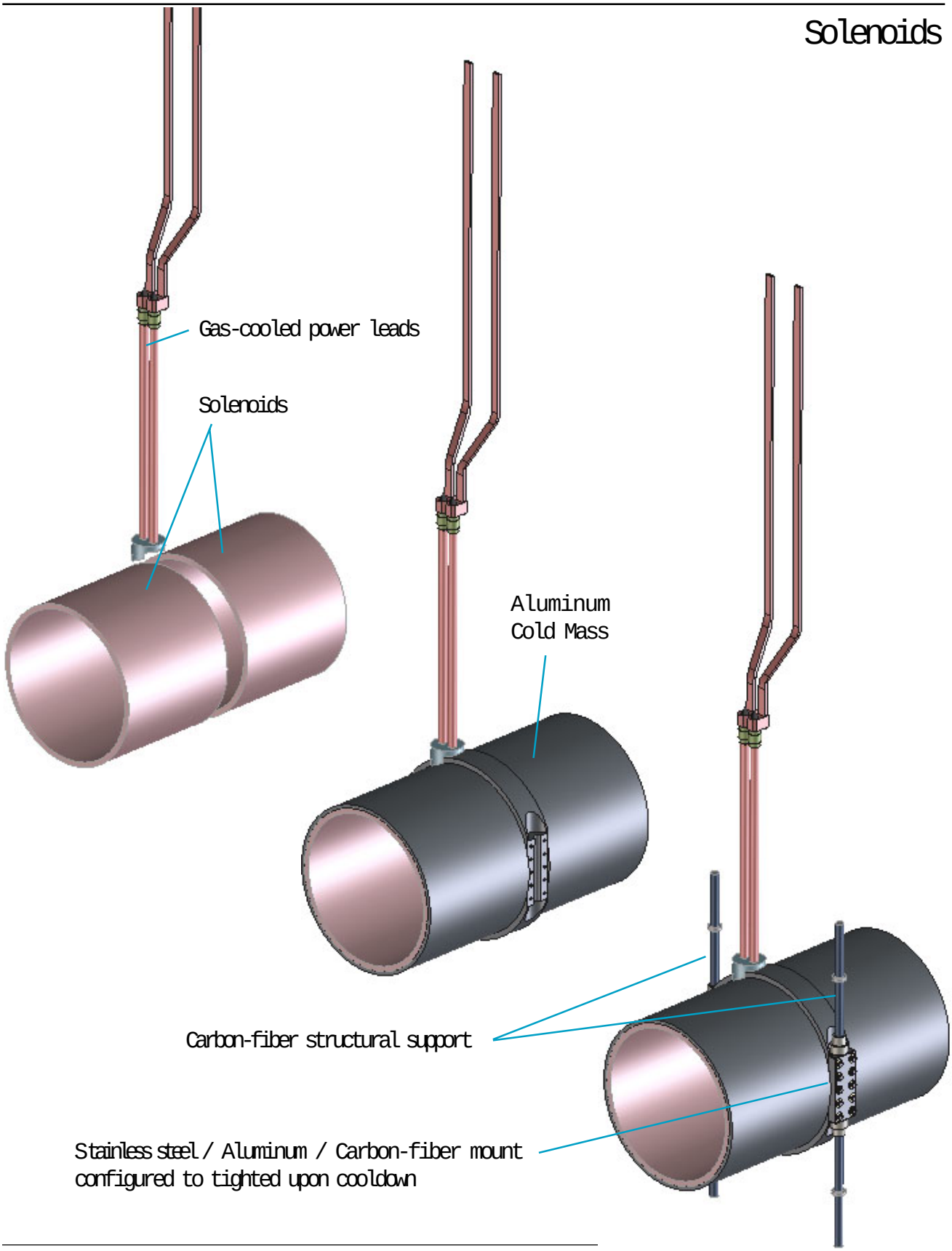

2nd Pass

Phase Rotation Solenoid / Induction Accelerator

W orkup 01/2000

Solenoid Cryo Assembly

Cooling Scenarios

Robin Lafever
Dave Vanecek
Simon Yu
Mike Green
Jim Fockler

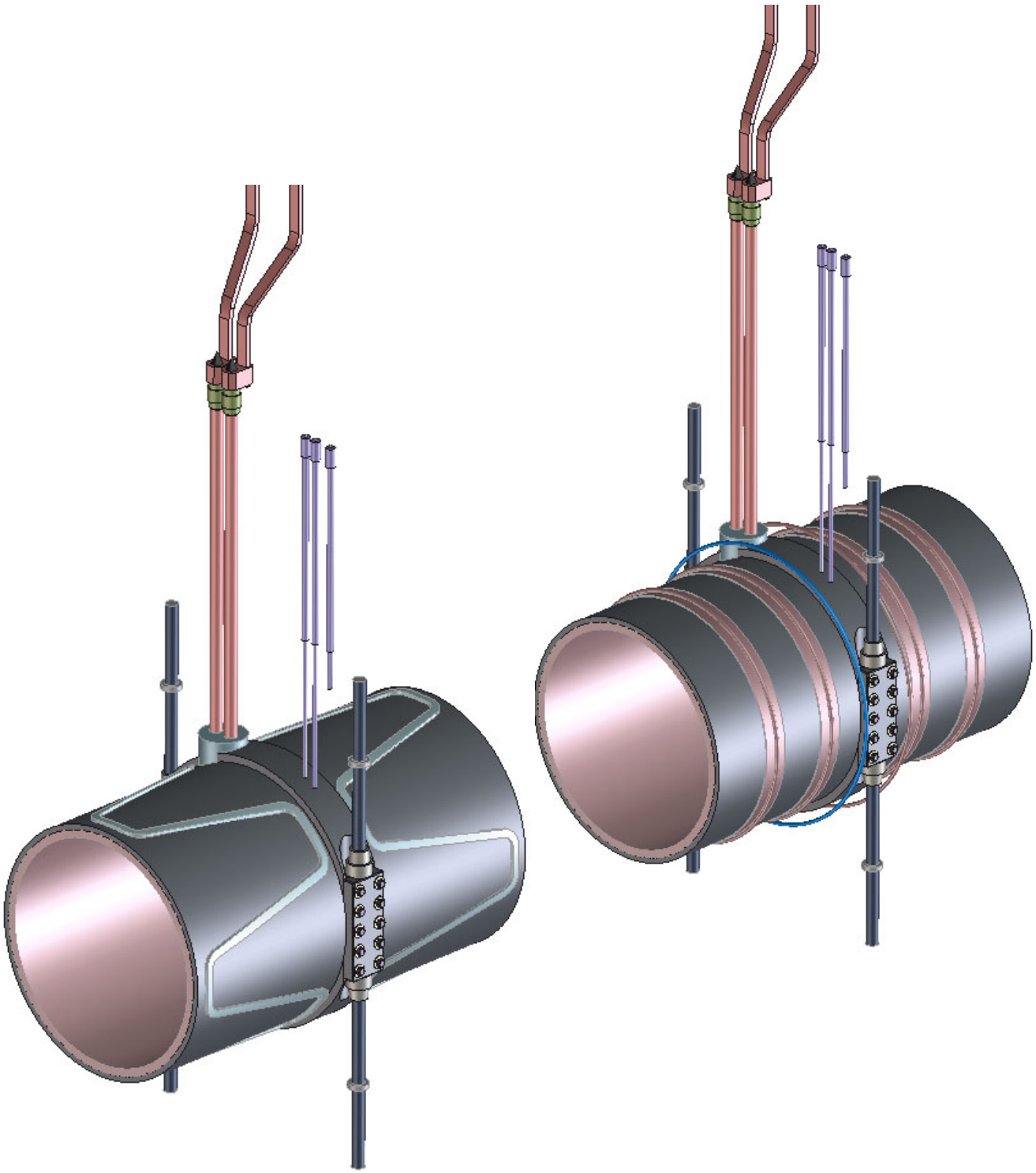

Download this Image from: http://www-eng.lbl.gov/~lafever/PRA/Fitup_1/AAAA.html

2nd Pass

Phase Rotation Solenoid / Induction Accelerator

W orkup 01/2000

Solenoid Cryo Assembly

Robin Lafever
Dave Vanecek
Simon Yu
Mike Green
Jim Fockler

40 K Heat Shield

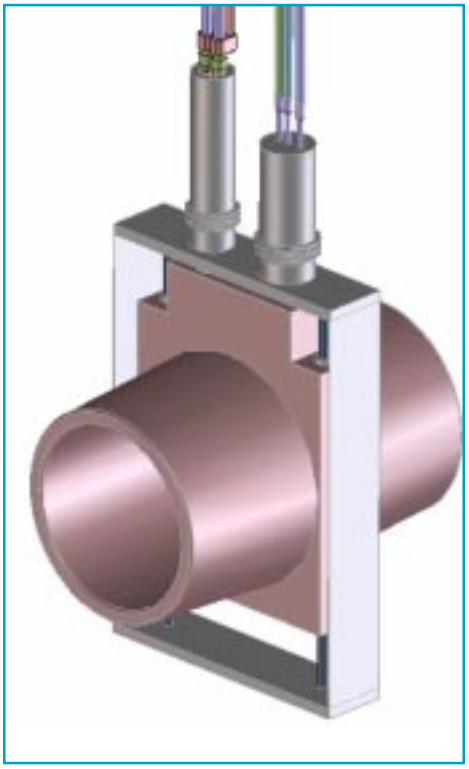

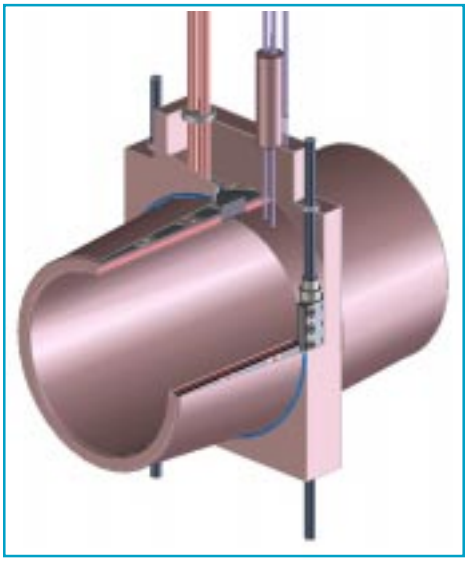

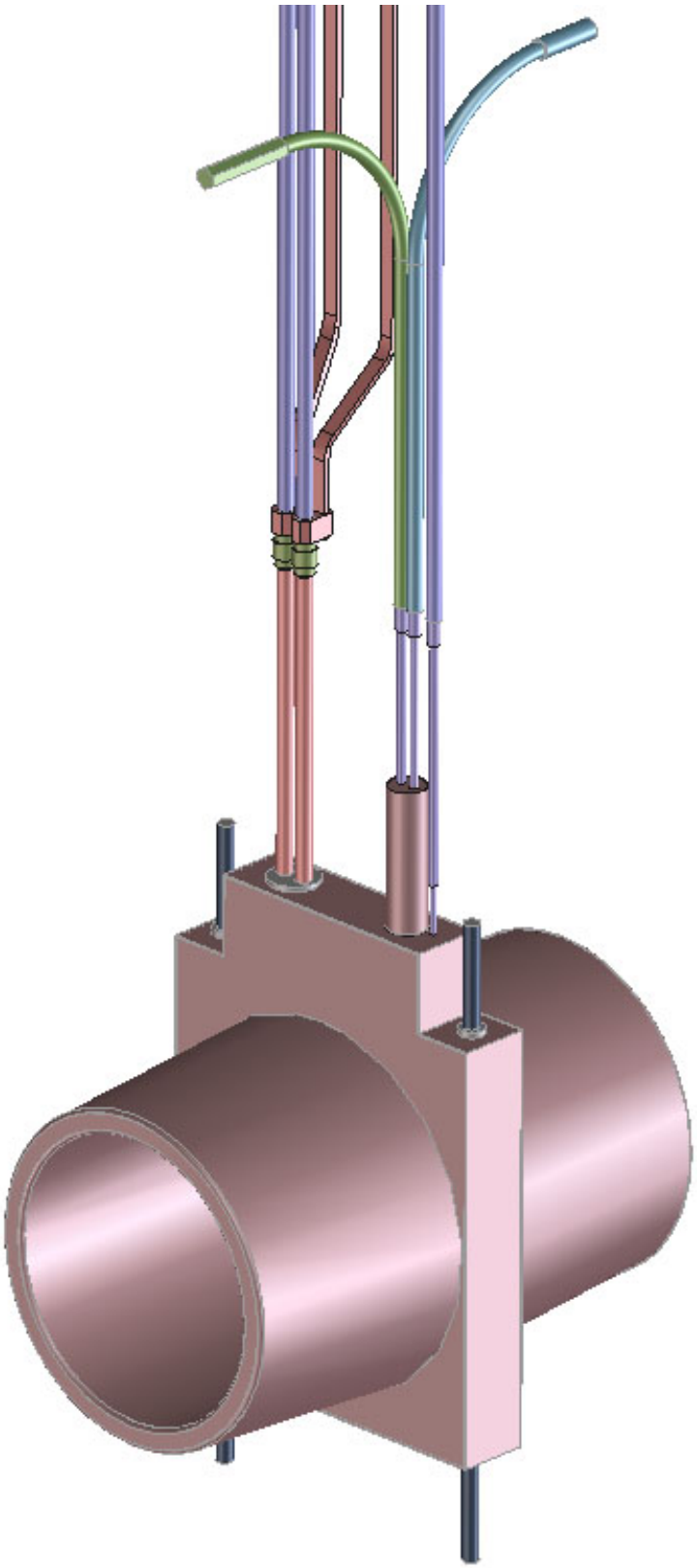

2nd Pass

Phase Rotation Solenoid / Induction Accelerator

W orkup 01/2000

Solenoid Cryo Assembly

Robin Lafever
Dave Vanecek
Simon Yu
Mike Green
Jim Fockler

Cryostat

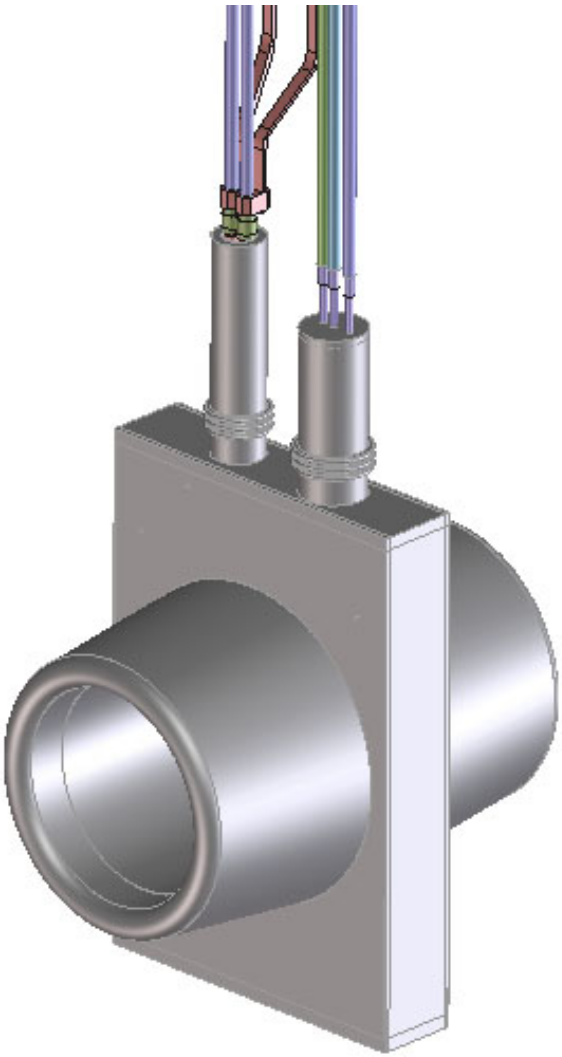

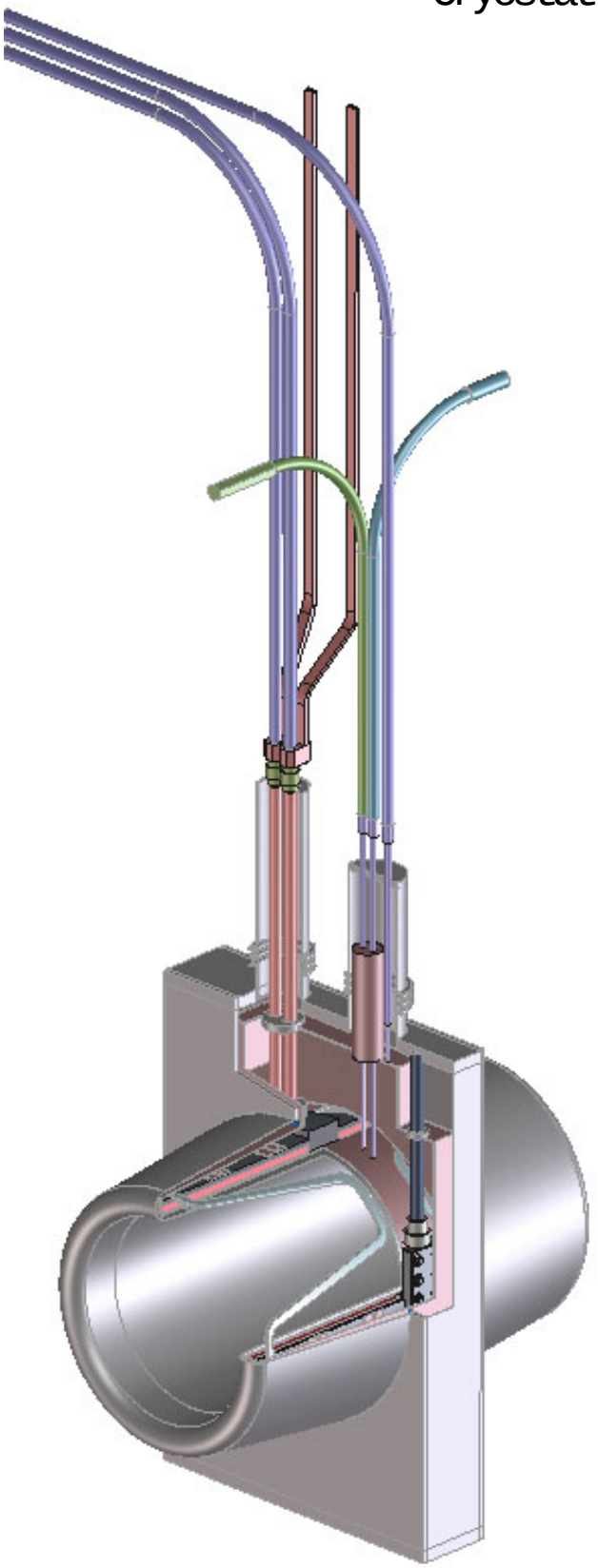

2nd Pass

Phase Rotation Solenoid / Induction Accelerator

W orkup 01/2000

Solenoid Cryo Assembly

Robin Lafever
Dave Vanecek
Simon Yu
Mike Green
Jim Fockler

Cryostat

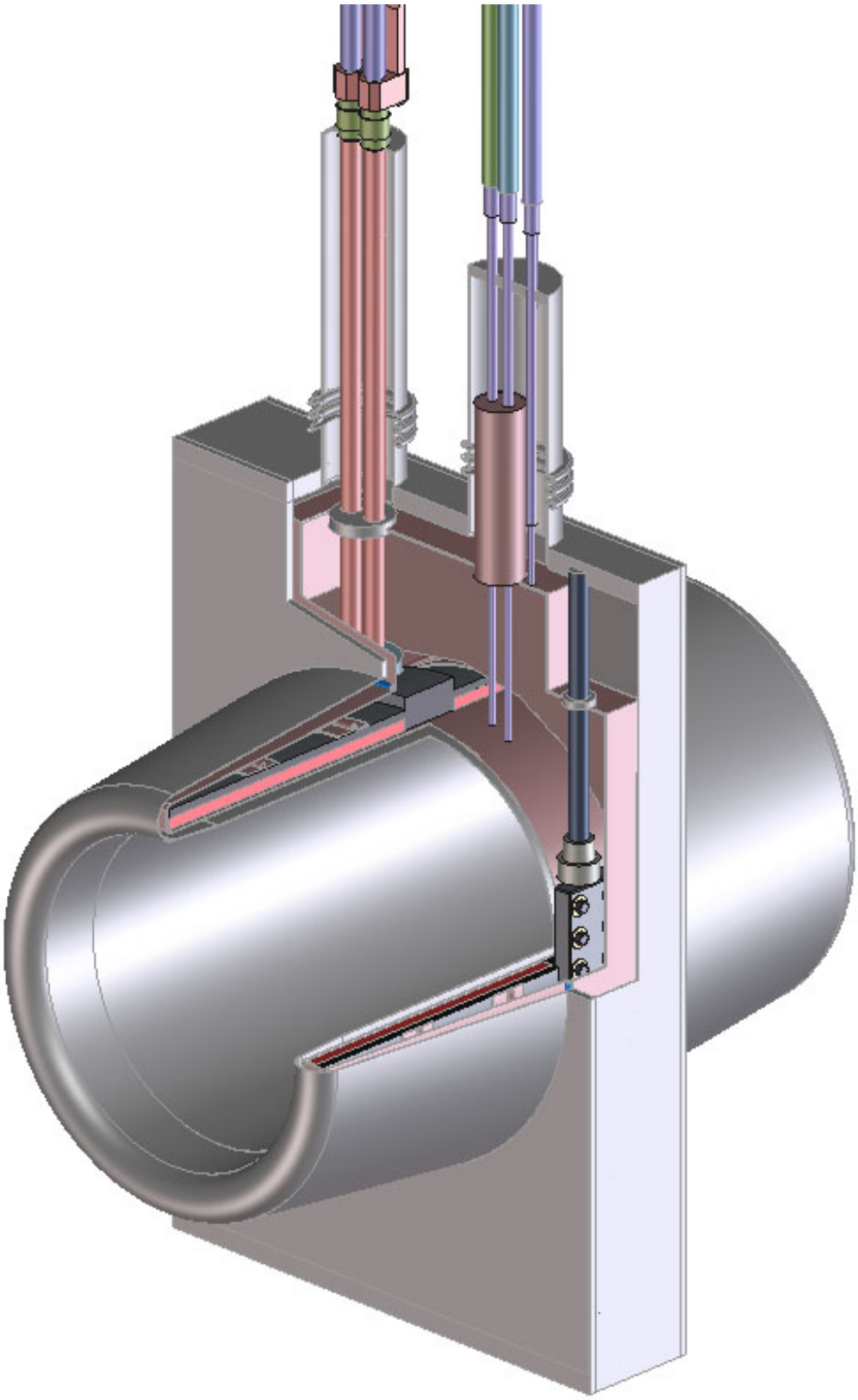

Download this Image from: http://www-eng.lbl.gov/~lafever/PRA/Fitup_1/AAAA.html

2nd Pass

Phase Rotation Solenoid / Induction Accelerator

W orkup 01/2000

Pulsed Power

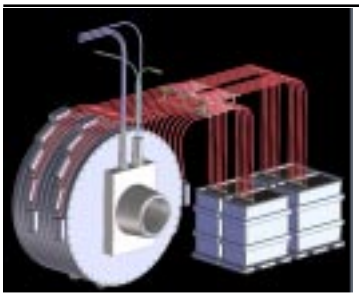

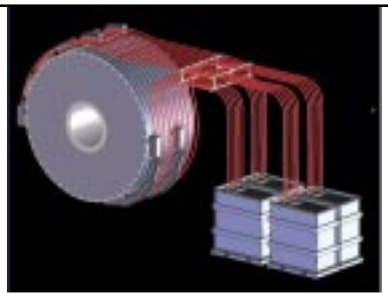

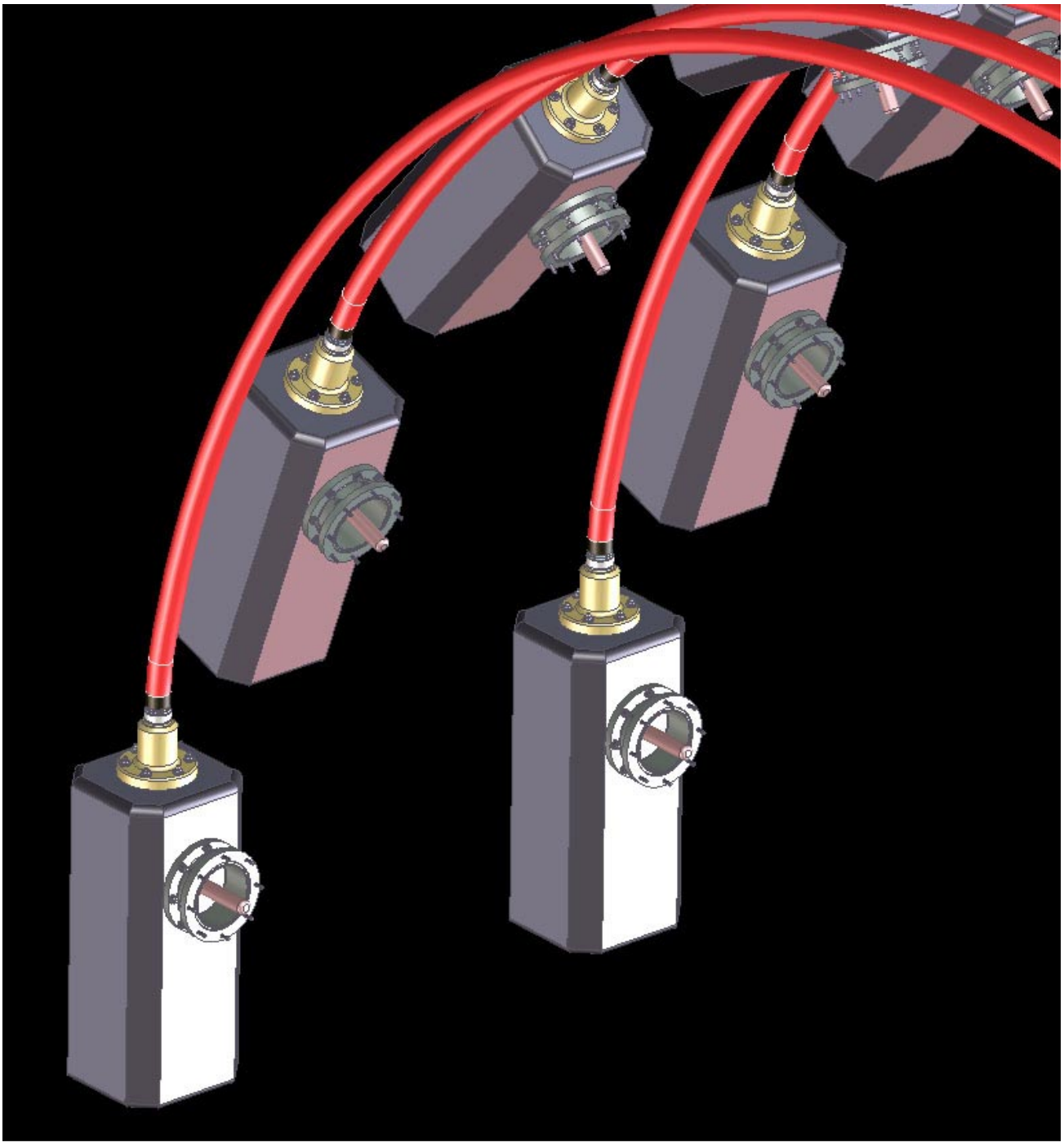

Download this Image from: http://www-eng.lbl.gov/~lafever/PRA/Fitup_1/AAAA.html