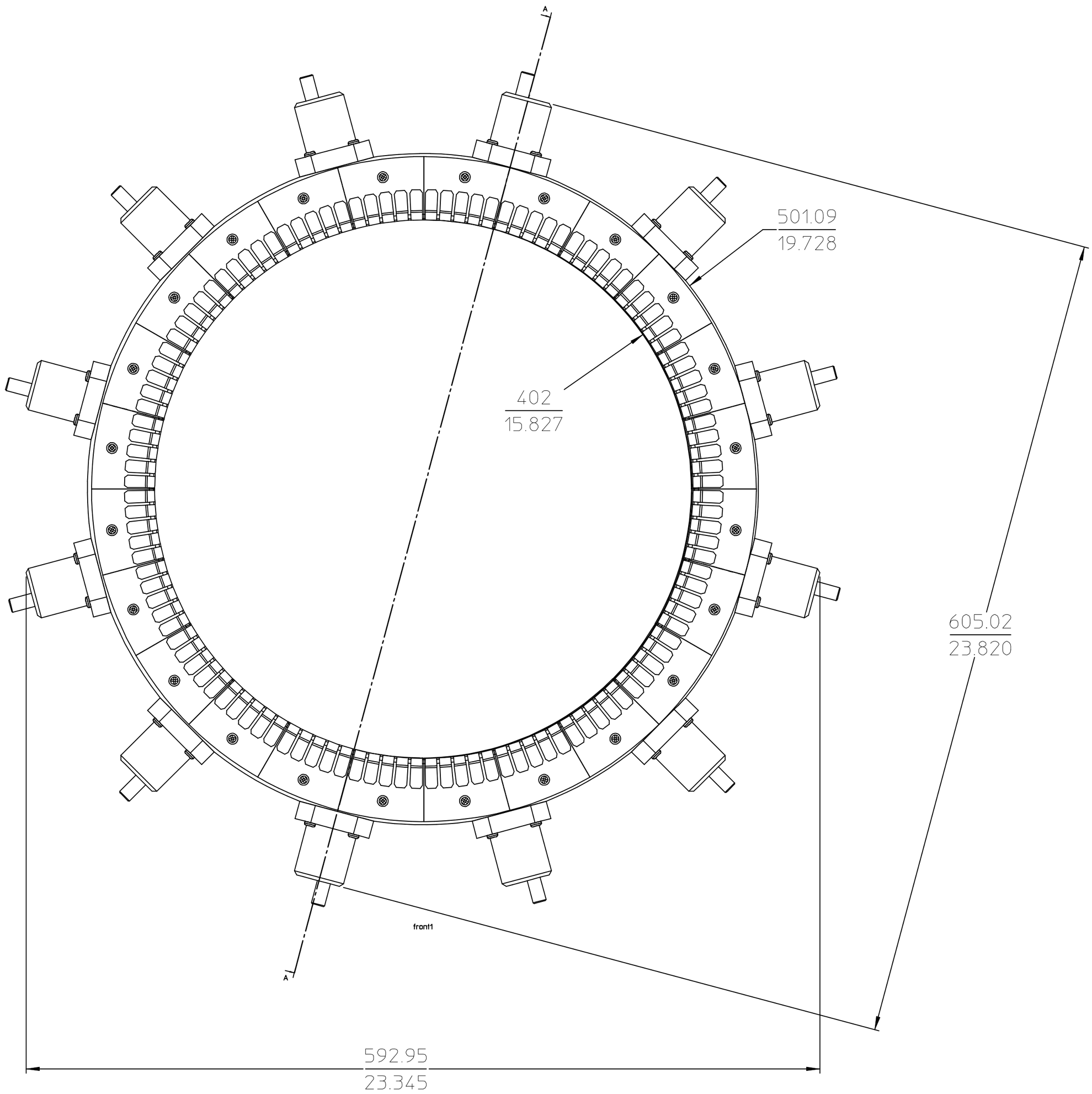
A
501.09
19.728
402
15.827
605.02
23.820
front1
A
592.95
23.345