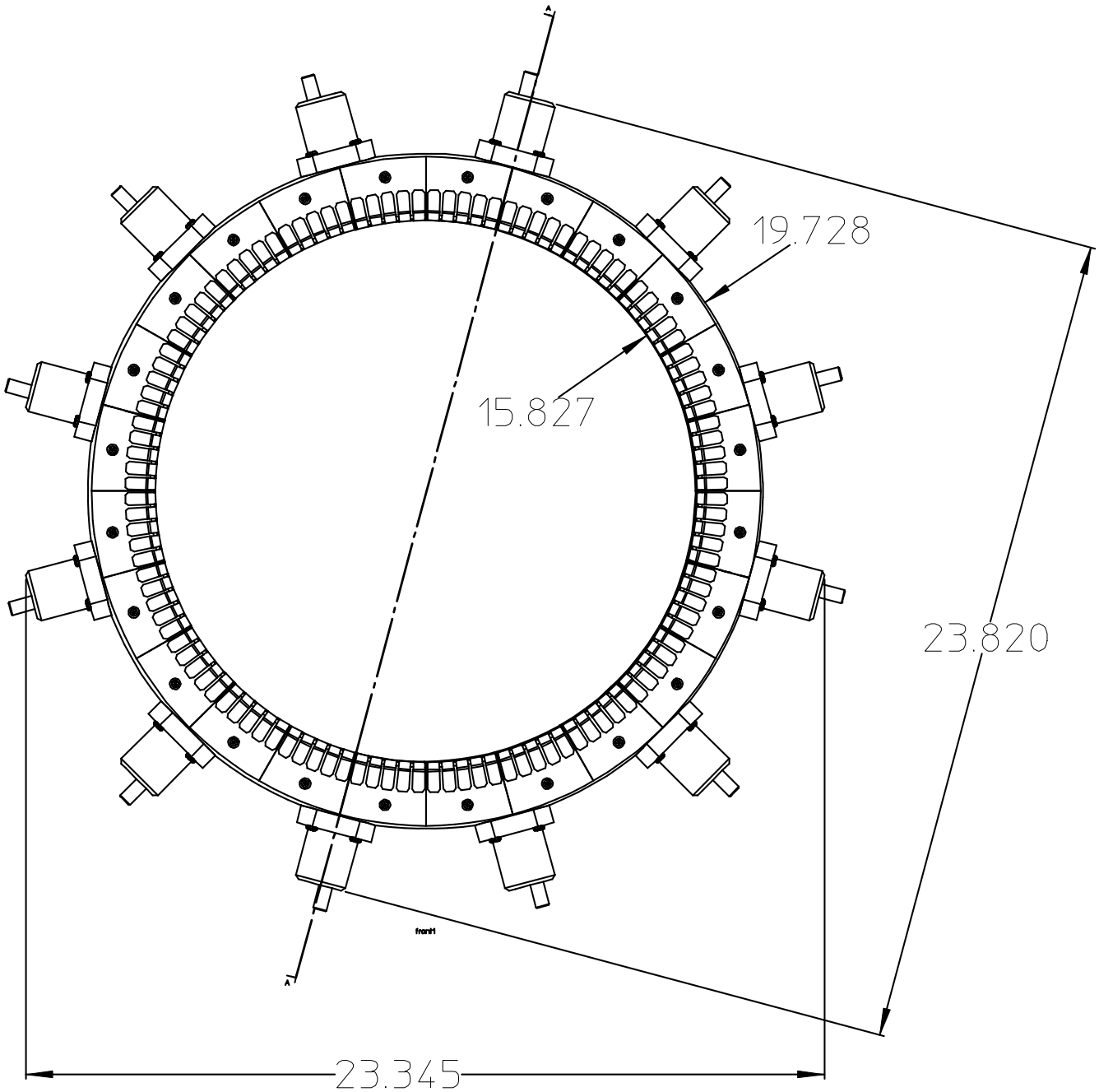
19.728
15.827
23.820
23.345
front1