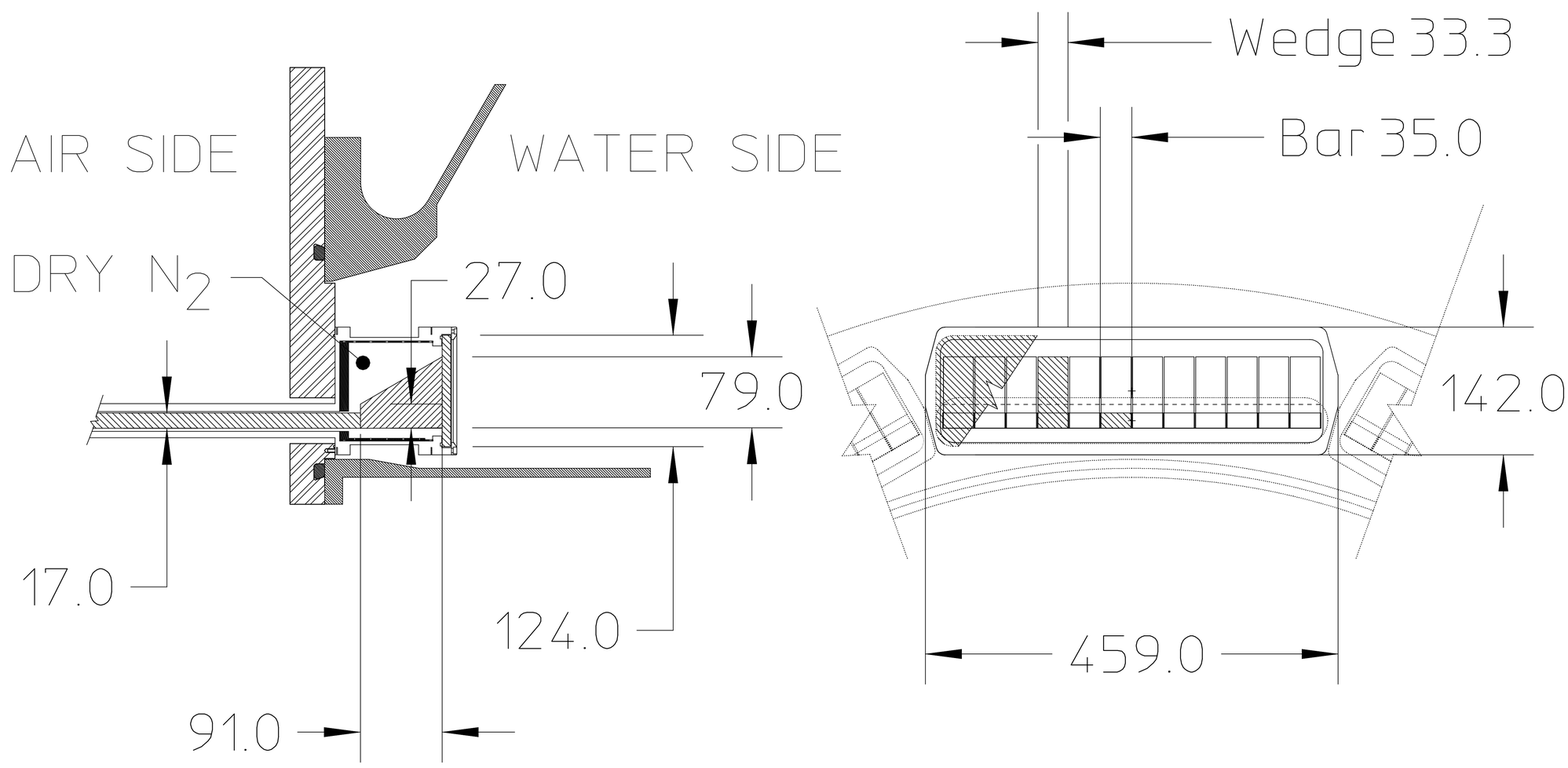

File: Fig3AA.mi
Date: 15-Aug- 100 13:41:14
Author: lafever
Dir: //me56/lafever/mosaic/NewDIRC/VG3