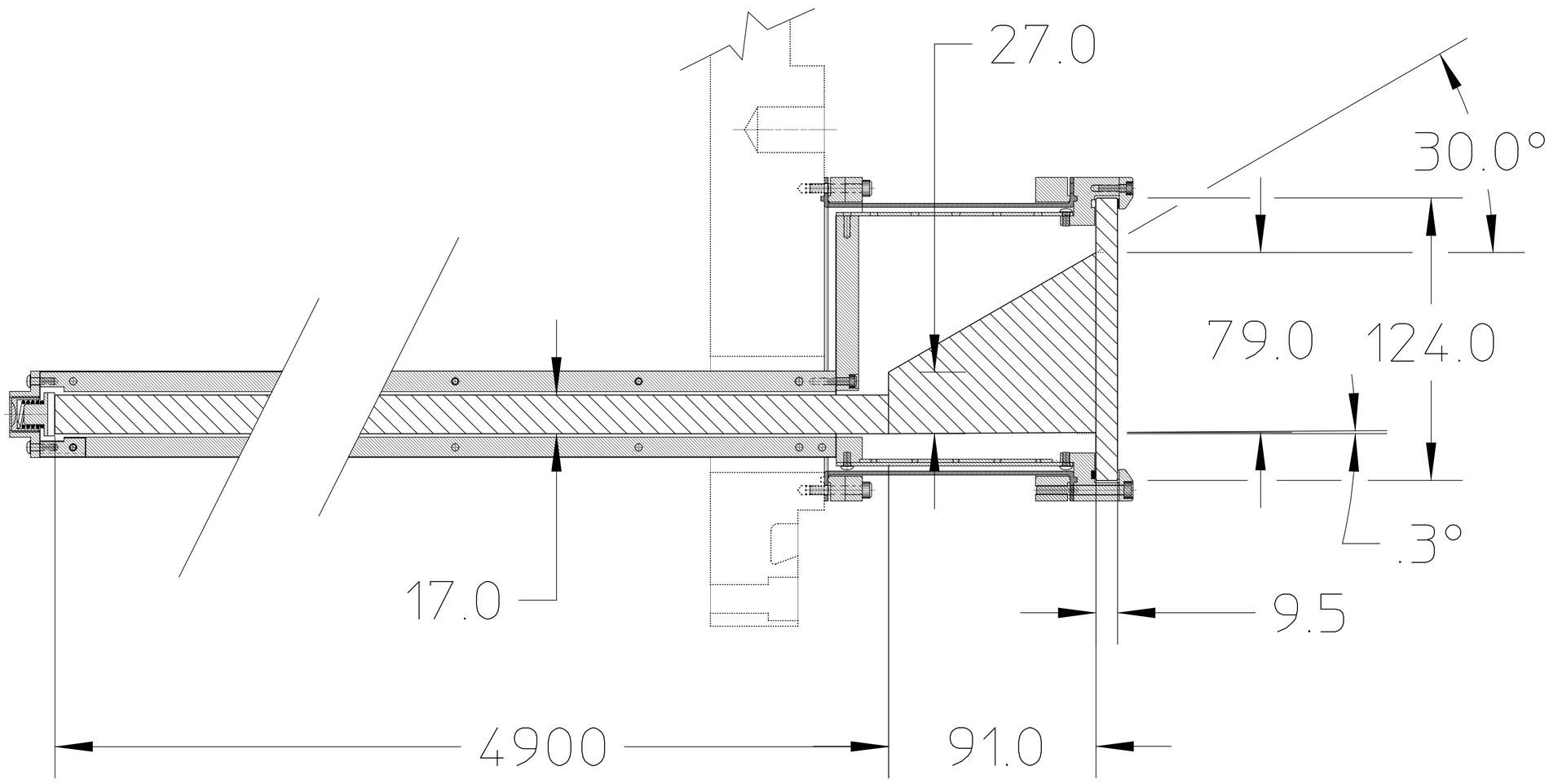

This illustrates the optical components

File: Fig2AA.mi
Date: 14-Aug- 100 18:14:28
Author: lafever
Dir: //me56/lafever/mosaic/NewDIRC/VG2