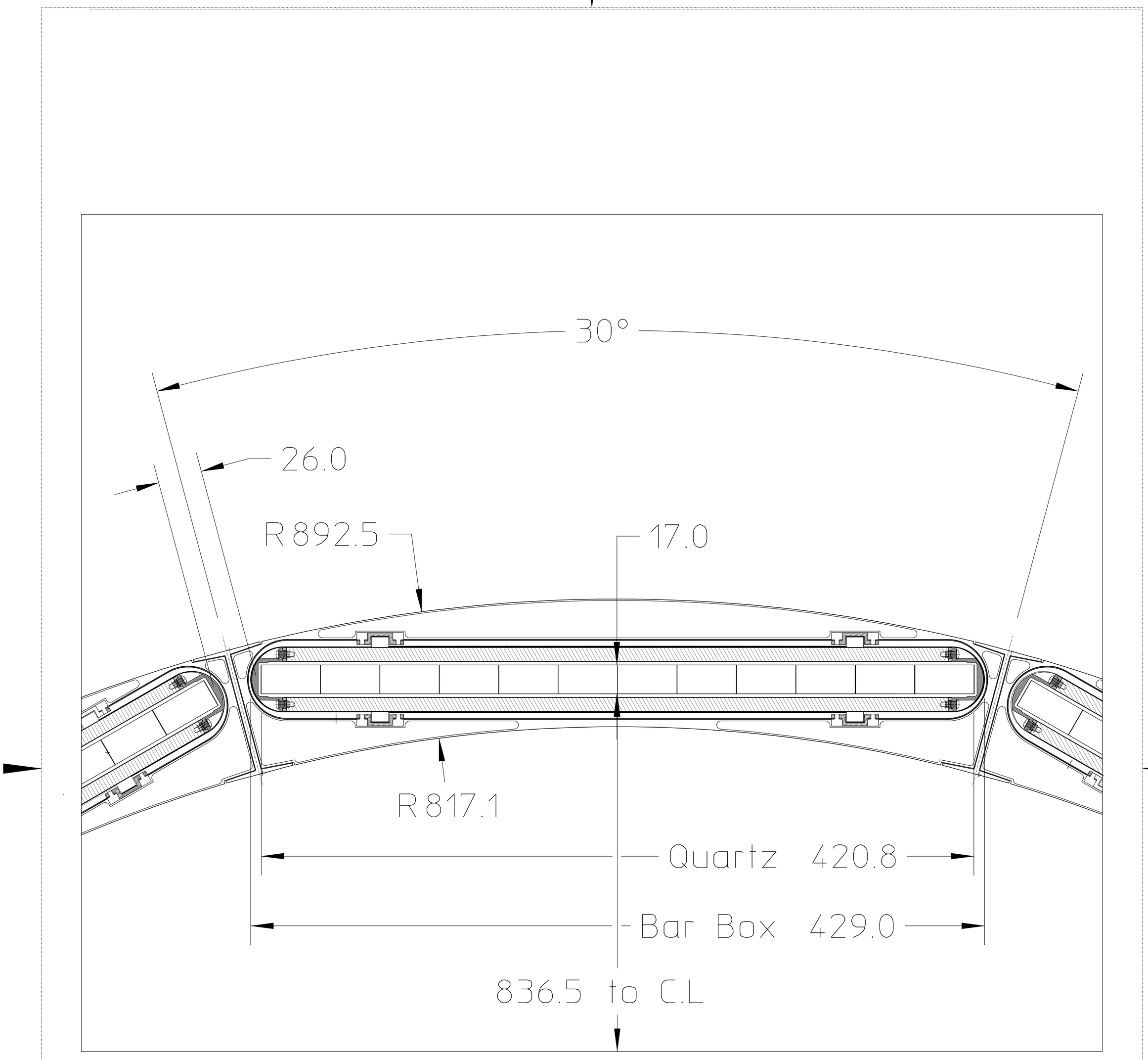

File: Fig1AA.mi
Date: 14-Aug- 100 18:40:50
Author: lafever
Dir: //me56/lafever/mosaic/NewDIRC/VG2