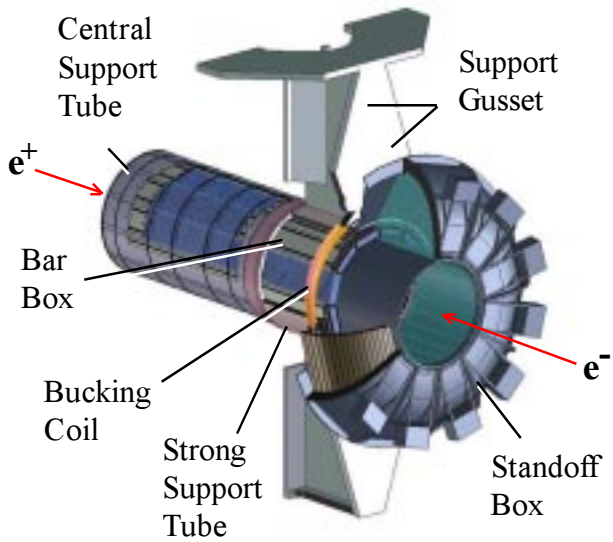
Central
Support
Tube
Support
Gusset
e+
Bar
Box
e-
Bucking
Coil
Strong
Support
Tube
Standoff
Box