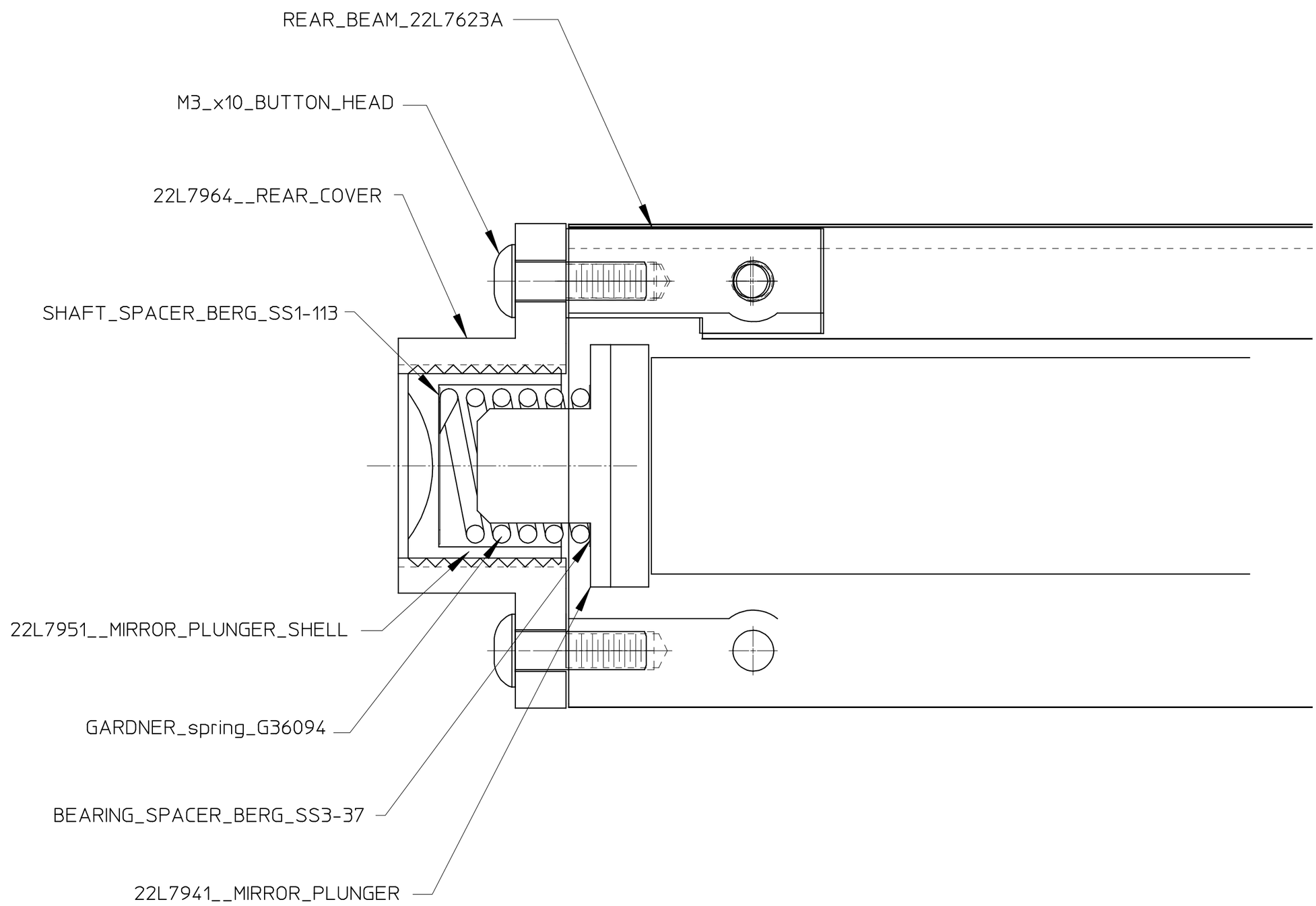

File: Fig_5a.mi
Date: 28-Jun- 100 20:51:20
Author: lafever
Dir: //me56/lafever/mosaic/NewDIRC

Fig 5a