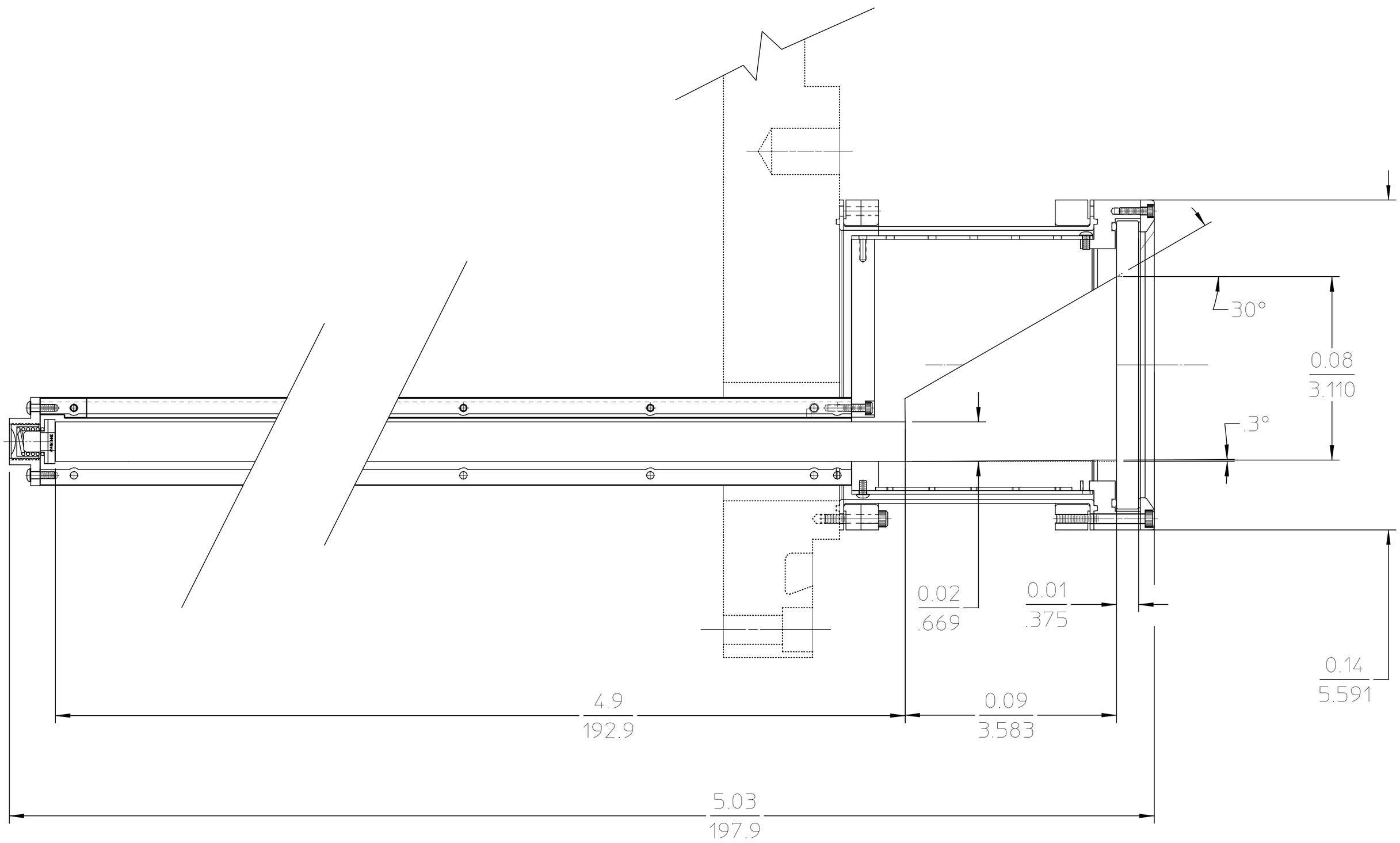

File: Fig_2.mi
Date: 6-Jul- 100 13:39:11
Author: lafever
Dir: //me56/lafever/mosaic/NewDIRC

Fig 2