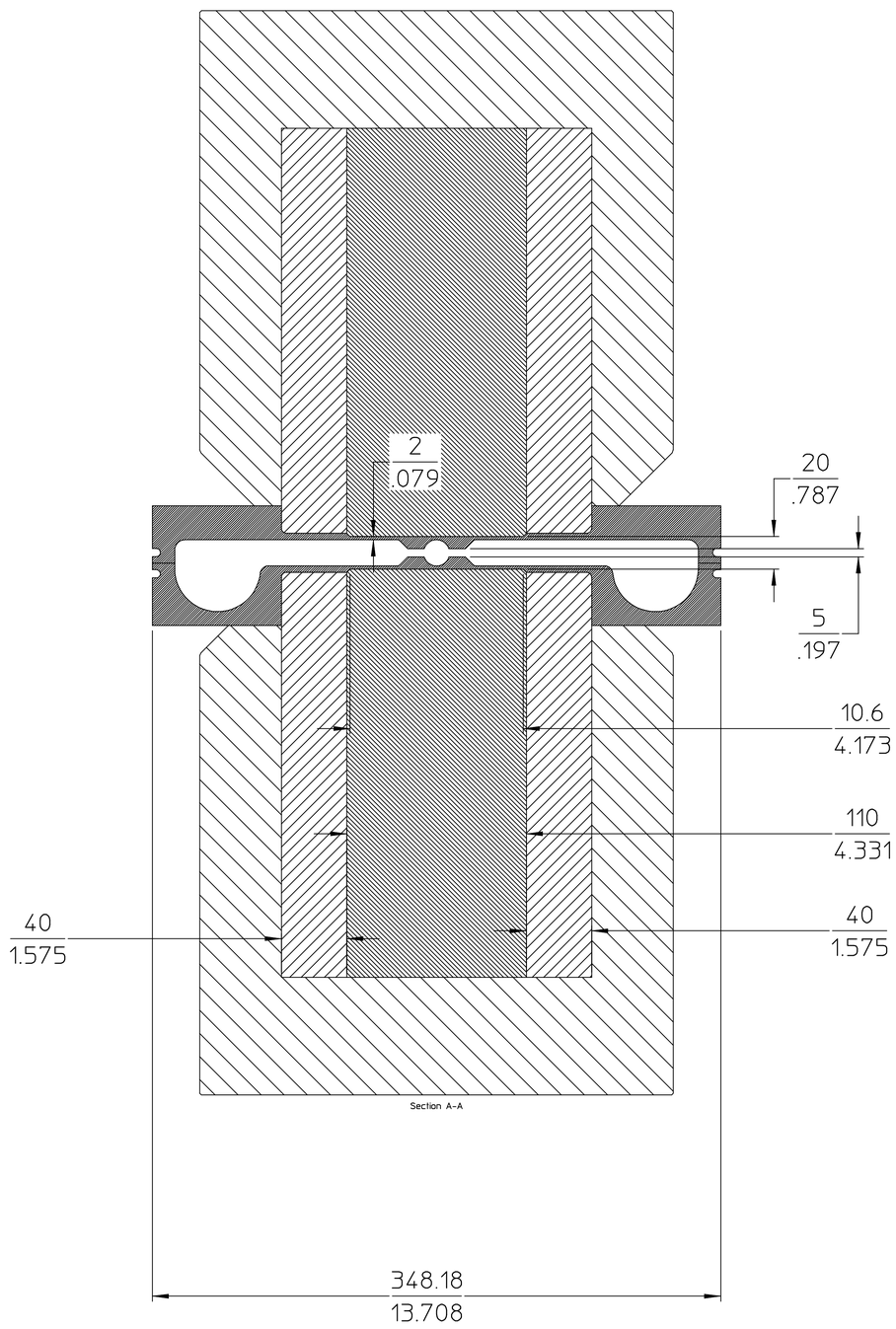

Section A-A
Hybrid Wiggler
"A" model

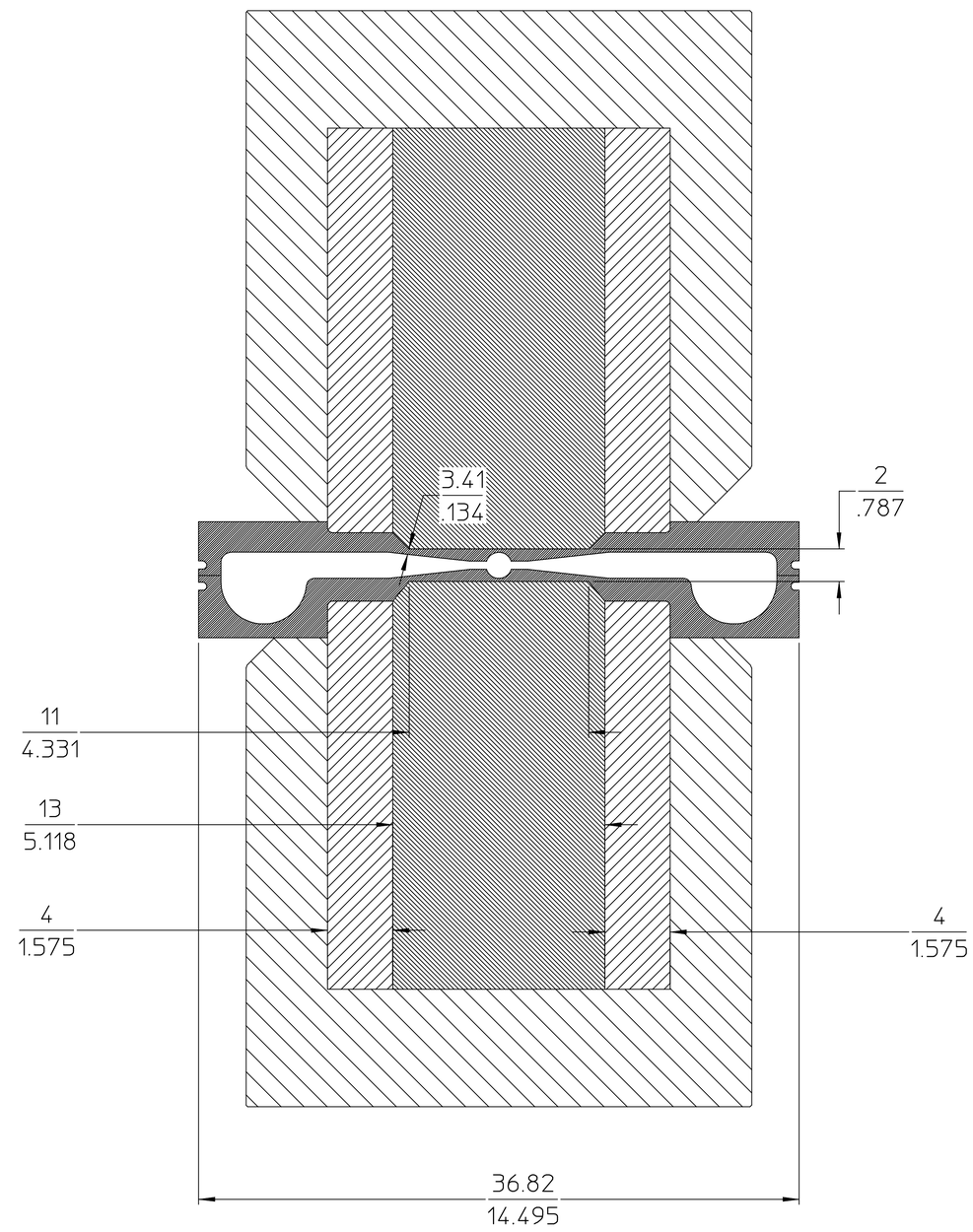

Section A-A
Hybrid Wiggler
"B" model

File: WigglerCell_AB_Sections.mi
Date: 5-Jul- 100 1:37:04
Author: lafever
Dir: //me56/lafever/mosaic/NLC/Wiggler