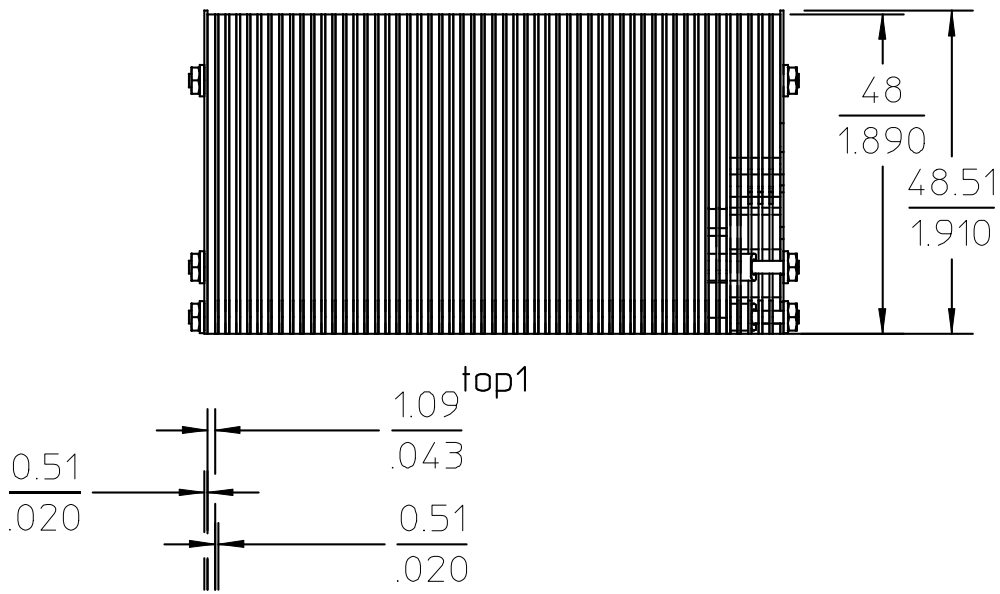
48
1.890
48.51
1.910
top1
1.09
.043
0.51
.020
0.51
.020

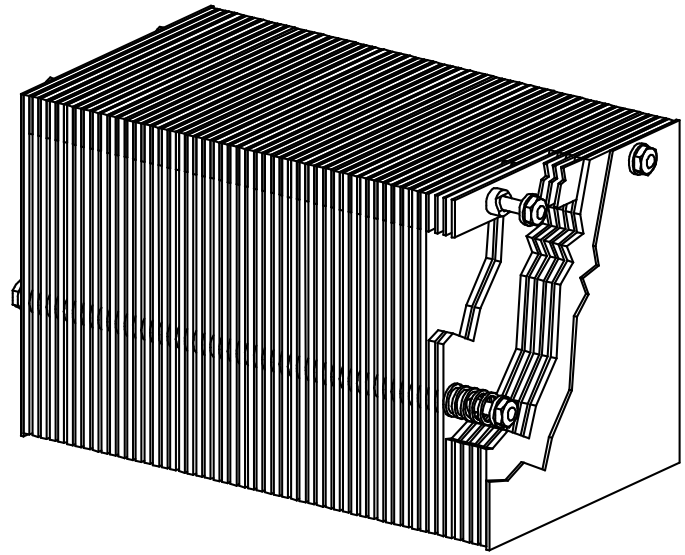
gen1

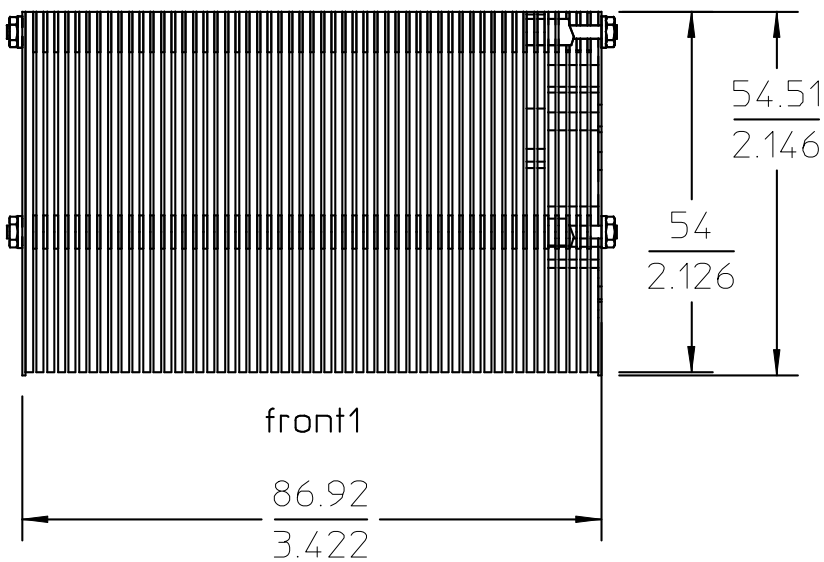
54.51
2.146
54
2.126
front1
86.92
3.422

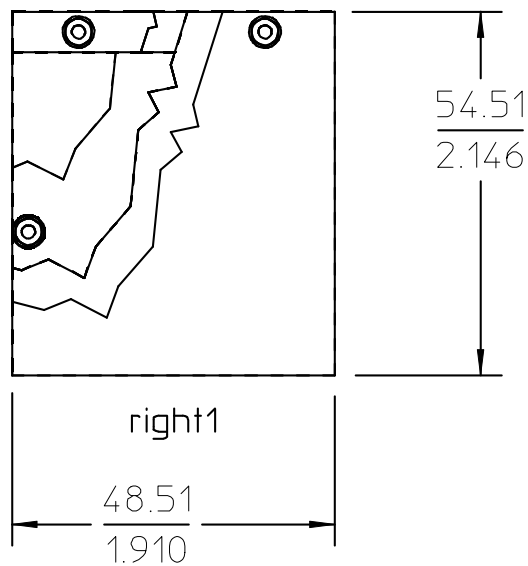
54.51
2.146
right1
48.51
1.910