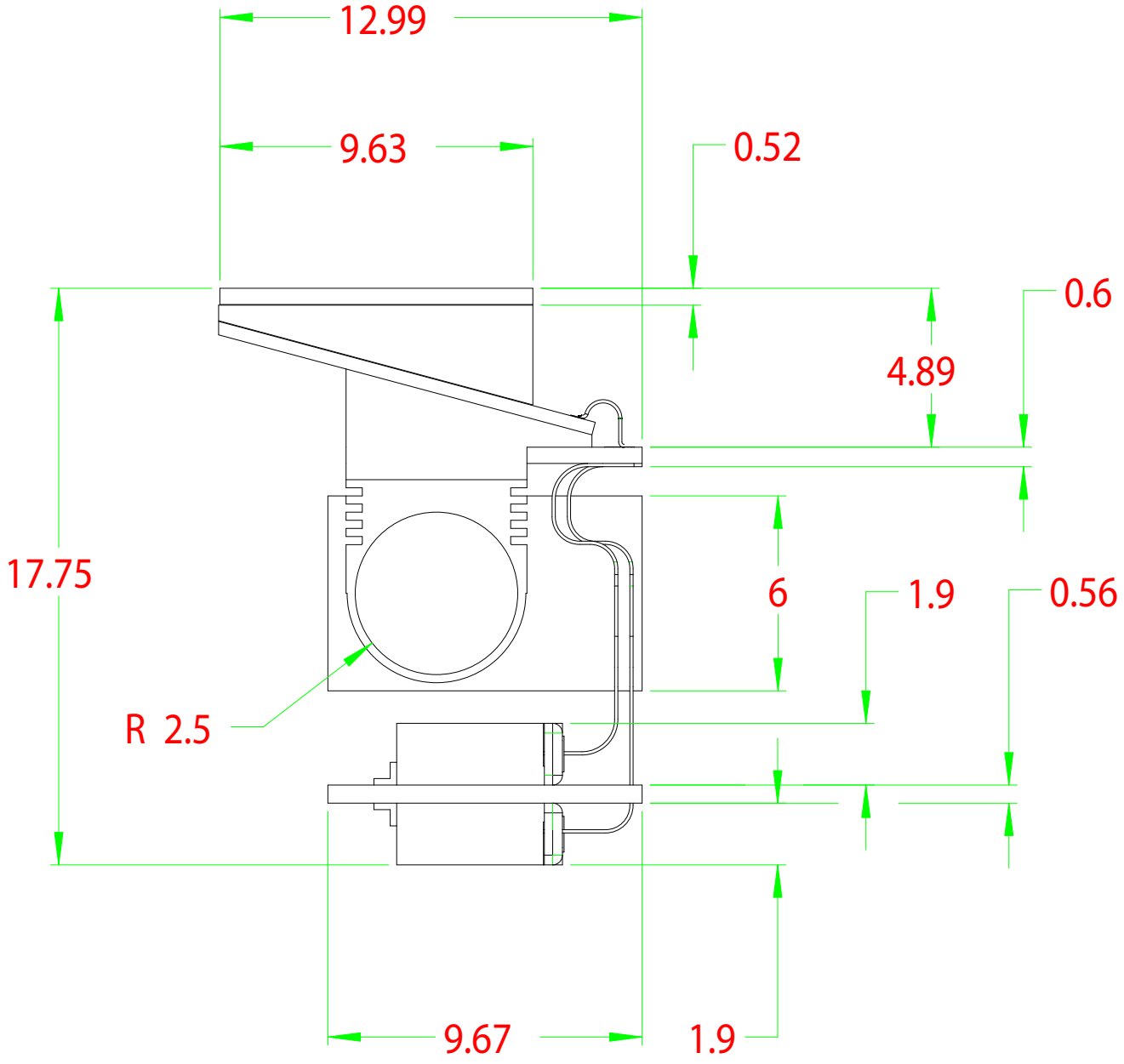

X-Section

"NextGen" D-Pad Detector Module