DRG No A0-204/78059 SHT1 OF 2

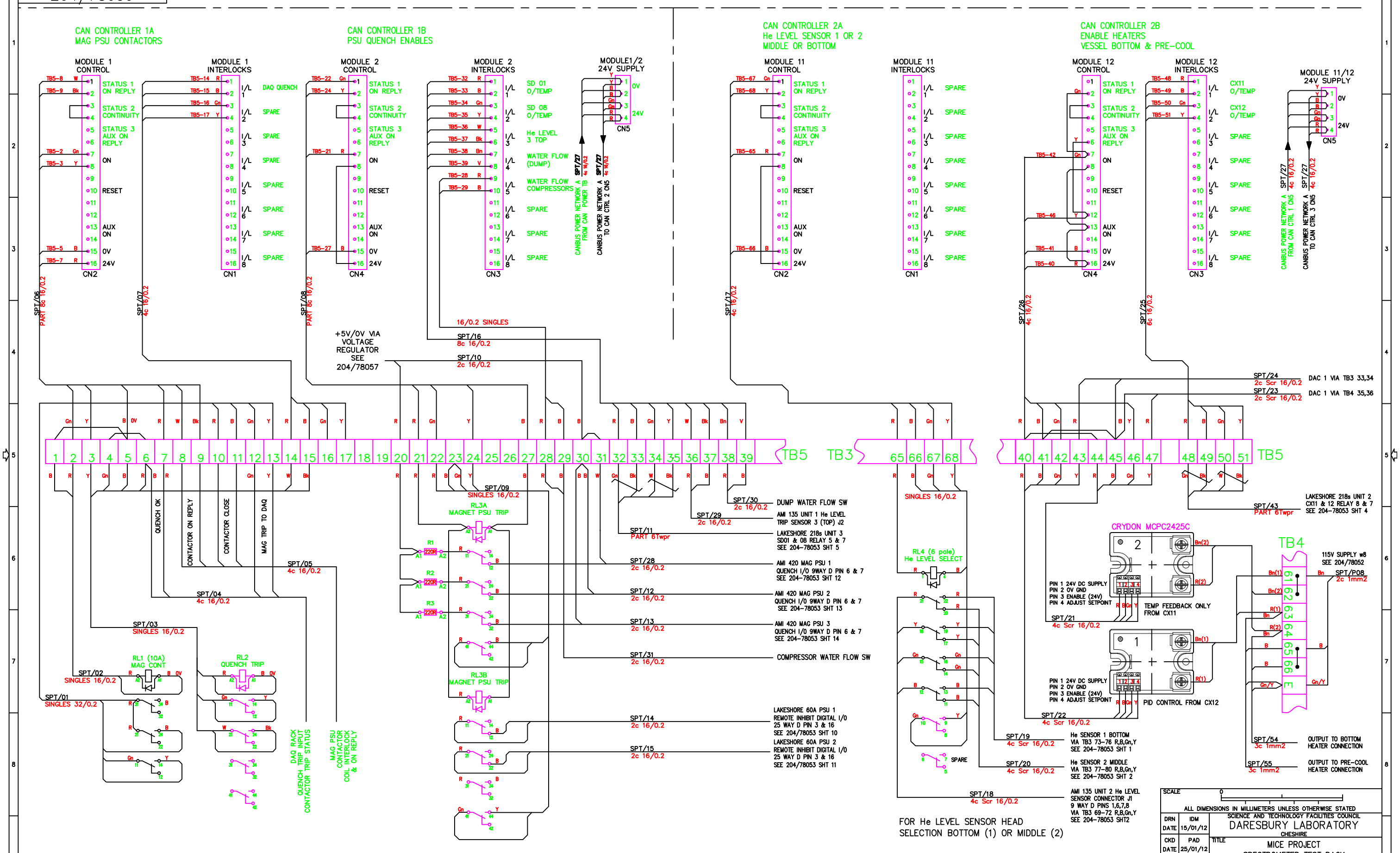

REF DRAWINGS
204/78050 SPECTROMETER TEST RACK BLOCK DIAGRAM
204/78051 SPECTROMETER TEST RACK G.A
204/78052 SPECTROMETER TEST RACK POWER DIST DIAGRAM
204/78053 SPECTROMETER TEST RACK EQUIP WIRING DIAGRAM
204/78055 SPECTROMETER TEST RACK CANBUS/VME NETWORK
204/78056 SPECTROMETER TEST RACK DAC/ADC WIRING DIAGRAM

SCALE 0

ALL DIMENSIONS IN MILLIMETERS UNLESS OTHERWISE STATED

DRN	IDM	SCIENCE AND TECHNOLOGY FACILITIES COUNCIL
DATE	15/01/12	DARESBURY LABORATORY CHESHIRE
CKD	PAD	TITLE
DATE	25/01/12	MICE PROJECT SPECTROMETER TEST RACK CANBUS WIRING DIAGRAM
CERT		
DATE		
APPD	IDM	DRG No A0-204/78059 SHT 1 OF 2 — ISSUE A
DATE	25/01/12	CAD PART No DL_204_78000 / 204_78059_1

DRAWING LIST:- DL_204_78000

CONTRACTORS COMPANY
CONTRACTORS DRG No

FIRST ISSUE A

ORIGINAL FRAME SIZE 1140mm X 790mm