DRG No A0-204/78050 SHT 1 OF 1

DRAWING PRACTICE TO BS308 – THIRD ANGLE PROJECTION

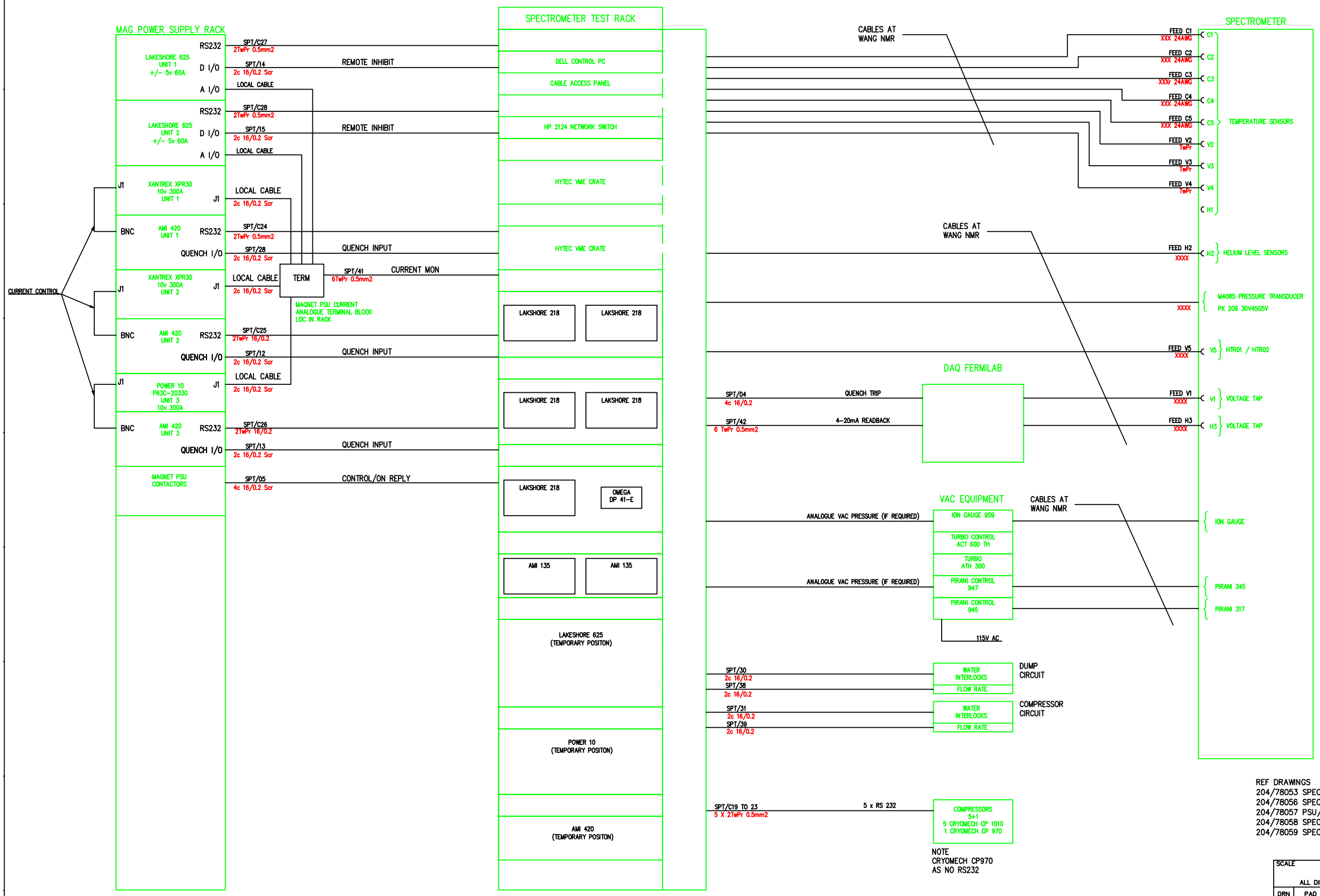

REF DRAWINGS
204/78053 SPECTROMETER TEST RACK EQUIP WIRING DIAGRAM
204/78056 SPECTROMETER TEST RACK DAC/ADC WIRING DIAGRAM
204/78057 PSU/COMMS/SIGNAL CONVERTER WIRING DIAGRAM
204/78058 SPECTROMETER TEST RACK RS232 WIRING DIAGRAM
204/78059 SPECTROMETER TEST RACK CANBUS WIRING DIAGRAM

SCALE 0

ALL DIMENTIONS IN MILLIMETERS UNLESS OTHERWISE STATED

DRN DATE	PAD AUG 2011	SCIENCE AND TECHNOLOGY FACILITIES COUNCIL DARESBURY LABORATORY CHESHIRE
CKD DATE	I.M. 27/03/12	TITLE MICE COOLING CHANNEL TEST RACK CABLE BLOCK DIAGRAM
CERT DATE		
APPD DATE	I.M. 27/03/12	DRG No A0-204/78050 SHT 1 OF 1 ISSUE A
		CAD PART No 204/78050

DRAWING LIST:– DL204/78000

CONTRACTORS COMPANY
CONTRACTORS DRG No

A FIRST ISSUE

ORIGINAL FRAME SIZE 1140mm X 790