REVISIONS				
REV	DWG	CHK	DATE	DESCRIPTION
0001	JHS		2013-07-05	initial drawing

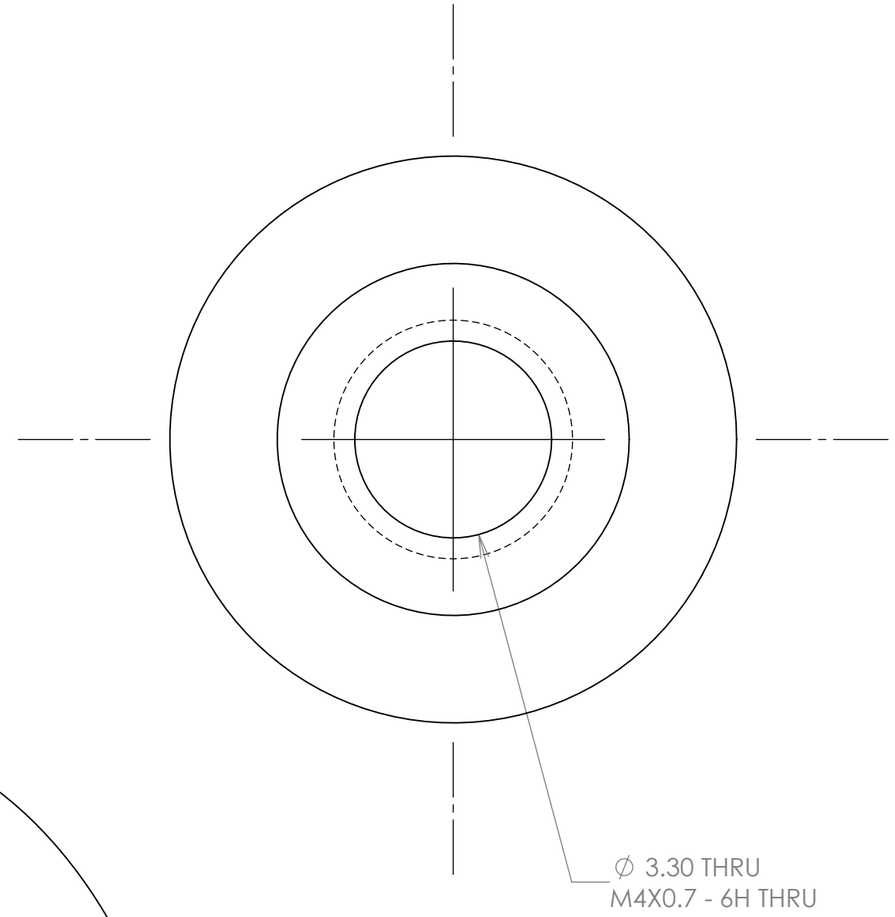

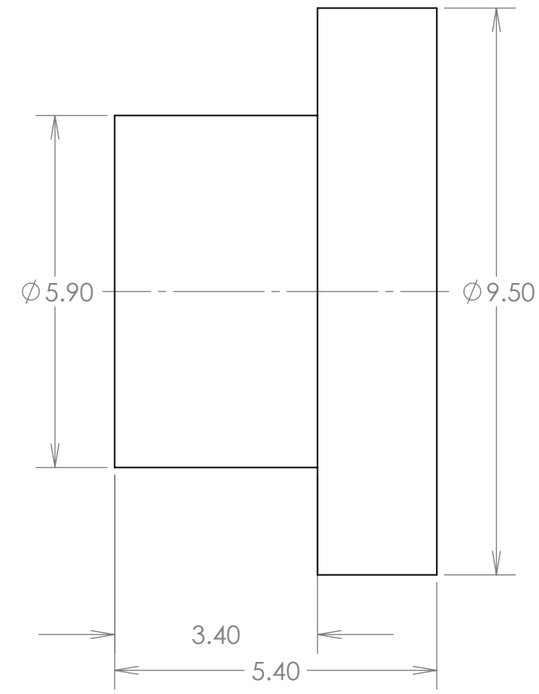

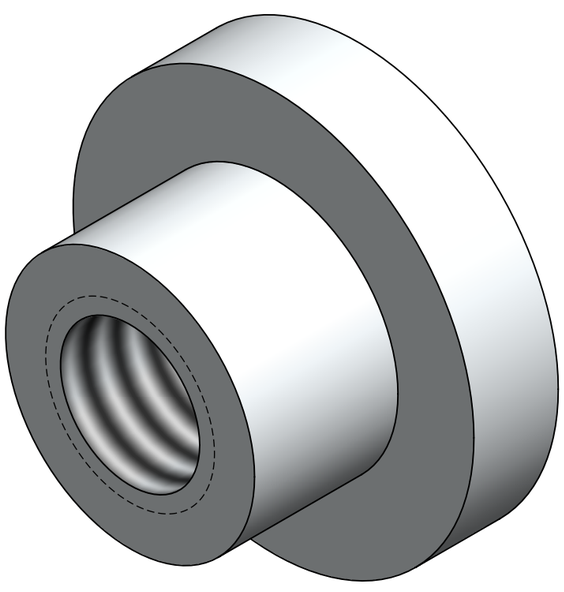

MATERIAL 6061-T6

SURFACE TREATMENT Conversion Coat

DIMENSIONS IN MM. UNLESS OTHERWISE SPECIFIED:

TOLERANCES		
	X.X ± 0.5	FRAC. ± 1/64
	X.XX ± 0.1	ANGLES ± 1.00°
	X.XXX ± 0.05	FINISH 3.2 (um)

ERNEST ORLANDO LAWRENCE BERKELEY NATIONAL LABORATORY
UNIVERSITY OF CALIFORNIA - BERKELEY

HFT

IDS EFS Captive Nut

DWG BY J. H. Silber	DATE 2013-07-05
CHK BY	DATE
APR BY	DATE

THREADS ARE CLASS 2
CHAMFER ENDS OF ALL SCREW THREADS 30°
CUT ROUND, 1.5 THREAD RELIEF ON MACHINED THREADS
BREAK EDGES .016 MAX. ON MACHINED WORK
REMOVE BURRS, WELD SPLATTER & LOOSE SCALE
IN ACCORDANCE WITH ASME Y14.5M & B46.1

SER NO.

SCALE: 10:1

SHEET 1 OF 1

PROJECT NO.	PROJECT NAME	CATEGORY CODE	DWG NO.	SIZE	REV.
				B	0001