REVISIONS				
REV	DWG	CHK	DATE	DESCRIPTION
0002	JHS		2012-07-05	Initial drawing
0004	JHS		2013-05-03	Narrow ski to 3.7mm, shallower entrance angle of 7°

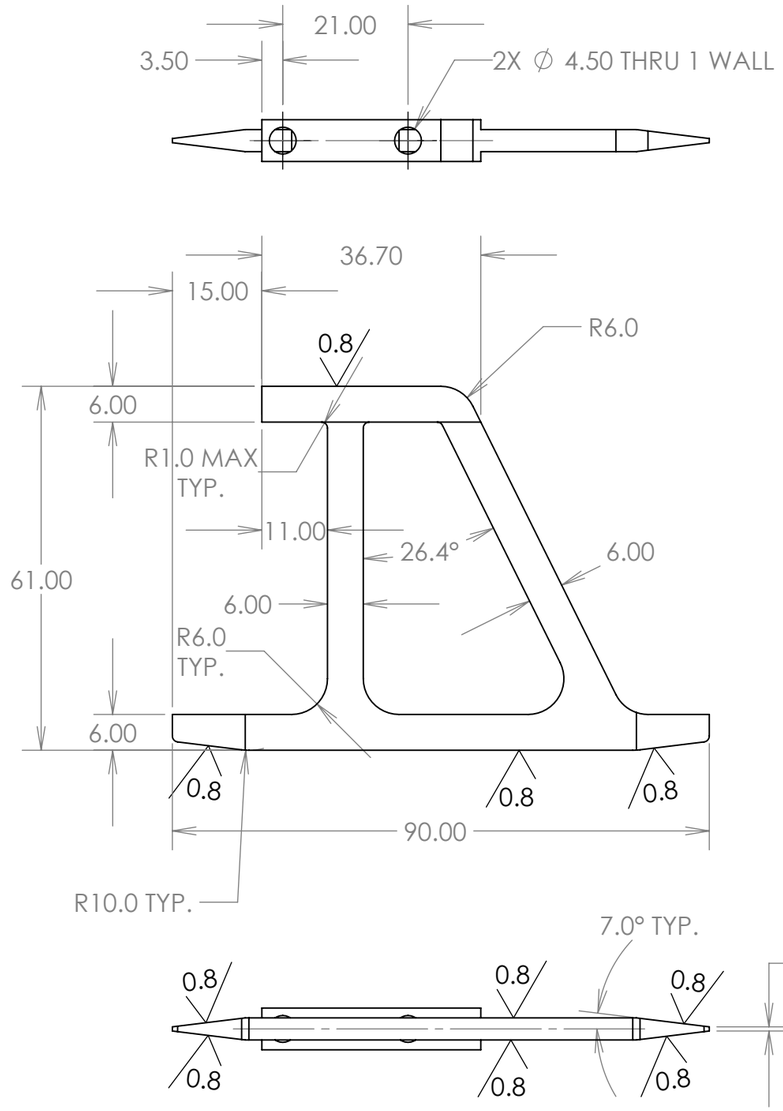

Waterjet roughness OK on profiles not explicitly marked with a surface finish.

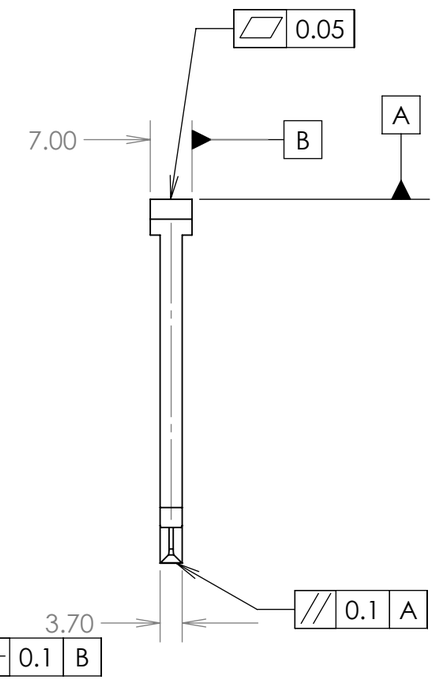

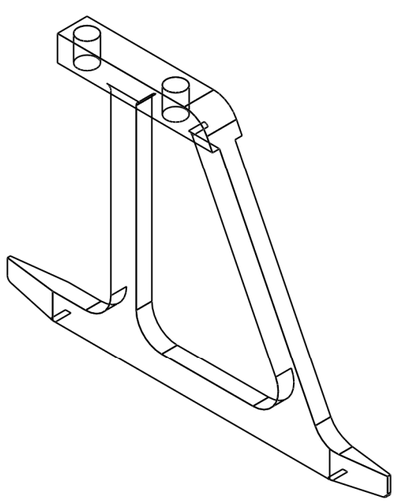

MATERIAL	2219 Aluminum Alloy
SURFACE TREATMENT	

DIMENSIONS IN MM. UNLESS OTHERWISE SPECIFIED:

TOLERANCES		
	X.X ± 0.5	FRAC. ± 1/64
	X.XX ± 0.1	ANGLES ± 1.00°
	X.XXX ± 0.05	FINISH 3.2 (um)

ERNEST ORLANDO LAWRENCE BERKELEY NATIONAL LABORATORY
UNIVERSITY OF CALIFORNIA - BERKELEY

HFT

MSC Transition BP Collar Support Lower

DWG BY J.H. Silber	DATE 2012-07-05		
CHK BY	DATE		
APR BY	DATE		

THREADS ARE CLASS 2
CHAMFER ENDS OF ALL SCREW THREADS 30°
CUT ROUND, 1.5 THREAD RELIEF ON MACHINED THREADS
BREAK EDGES .016 MAX. ON MACHINED WORK
REMOVE BURRS, WELD SPLATTER & LOOSE SCALE
IN ACCORDANCE WITH ASME Y14.5M & B46.1

SER NO.		SCALE: 1:1	SHEET 1 OF 1		
PROJECT NO.	PROJECT NAME	CATEGORY CODE	DWG NO.	SIZE	REV.
				B	0004