REVISIONS				
REV	DWG	CHK	DATE	DESCRIPTION
0004	JHS		2013-03-11	initial drawing
0005	JHS		2013-03-15	64" length, added 1mm step

Configuration: Tool

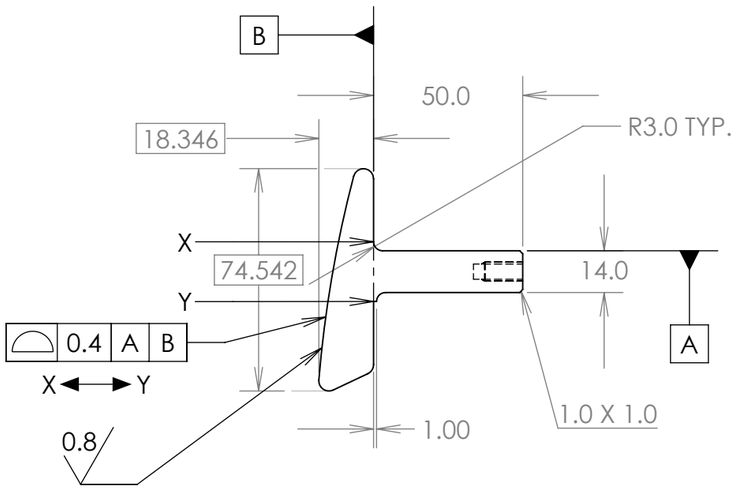

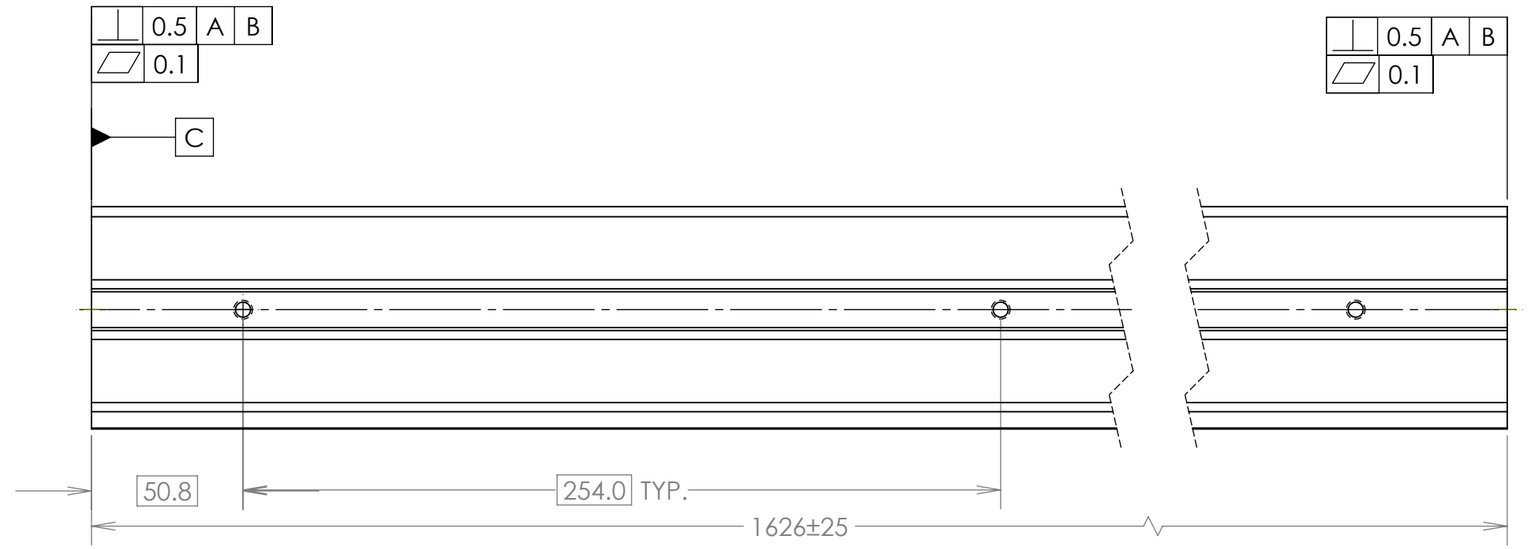

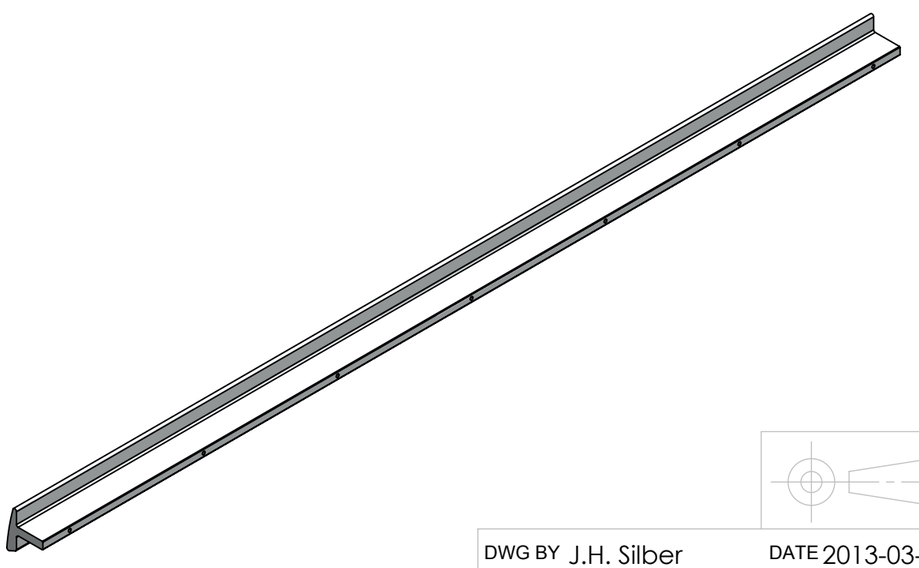

1. Profile between points X and Y defined by solid model.
2. Flatness / perpendicularity at the ends are to provide clean faces for trimming molded part.

MATERIAL 6061

SURFACE TREATMENT clean

DIMENSIONS IN MM. UNLESS OTHERWISE SPECIFIED:

TOLERANCES		
	X.X ± 0.5	FRAC. ± 1/64
	X.XX ± 0.1	ANGLES ± 1.00°
	X.XXX ± 0.05	FINISH 3.2 (um)

ERNEST ORLANDO LAWRENCE BERKELEY NATIONAL LABORATORY
UNIVERSITY OF CALIFORNIA - BERKELEY

HFT

SSD WSC Cable Tray

DWG BY J.H. Silber	DATE 2013-03-11		
CHK BY	DATE		
APR BY	DATE		

THREADS ARE CLASS 2
CHAMFER ENDS OF ALL SCREW THREADS 30°
CUT ROUND, 1.5 THREAD RELIEF ON MACHINED THREADS
BREAK EDGES .016 MAX. ON MACHINED WORK
REMOVE BURRS, WELD SPLATTER & LOOSE SCALE
IN ACCORDANCE WITH ASME Y14.5M & B46.1

SER NO.		SCALE: 1:2	SHEET 1 OF 1	
PROJECT NO.	PROJECT NAME	CATEGORY CODE	DWG NO.	SIZE B / REV. 0005