TAG	X LOC	Y LOC	SIZE
A1	9.95	-24.02	∅ 3.05 THRU ALL
A2	9.95	24.02	∅ 3.05 THRU ALL
A3	24.02	-9.95	∅ 3.05 THRU ALL
A4	24.02	9.95	∅ 3.05 THRU ALL

REVISIONS				
REV	DWG	CHK	DATE	DESCRIPTION
0003	JHS		2012-07-05	Initial drawing

NOTES:
1. Material is 2219 aluminum alloy
2. There are two configurations: "Default" and "Tapped". In Tapped config, run a tap for 4-40 helicoil thru. (Same #31 drilled hole.)
3. Faces (1) are modeled 0.03mm offset from ctr in solid model, to improve fit with adjoining parts. This is a nominal best-effort dimension, not explicitly called out here in drawing.

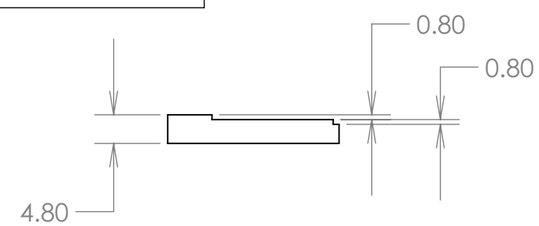

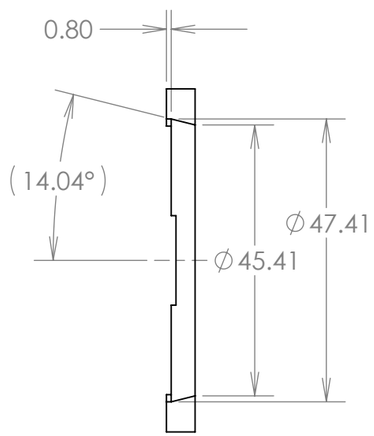

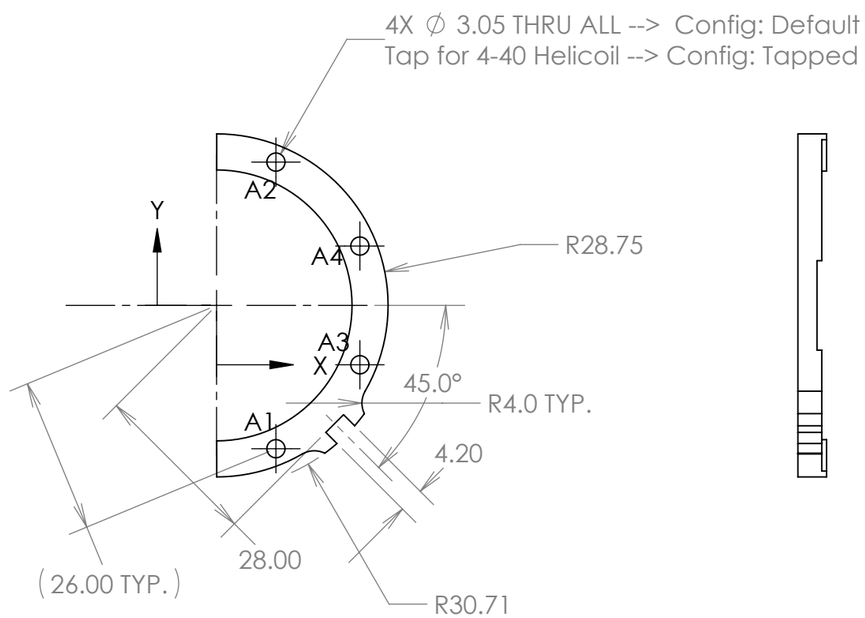

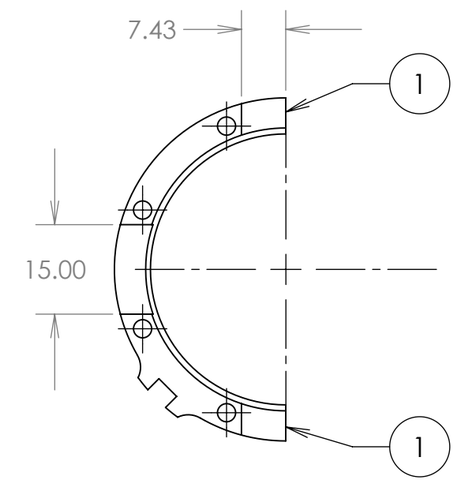

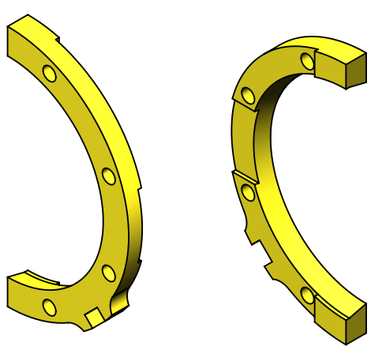

MATERIAL	2219 Aluminum Alloy		
SURFACE TREATMENT			
DIMENSIONS IN MM. UNLESS OTHERWISE SPECIFIED:			
TOLERANCES	X.X ± 0.5	FRAC. ± 1/64	
	X.XX ± 0.1	ANGLES ± 1.00°	
	X.XXX ± 0.05	FINISH 3.2 (um)	

ERNEST ORLANDO LAWRENCE BERKELEY NATIONAL LABORATORY
UNIVERSITY OF CALIFORNIA - BERKELEY

HFT

Small_Tapered_Clamp_Ring_Sliding

DWG BY J.H. Silber	DATE 2012-07-05	SER NO.	SCALE: 1:1
CHK BY	DATE		
APR BY	DATE		

THREADS ARE CLASS 2
CHAMFER ENDS OF ALL SCREW THREADS 30°
CUT ROUND, 1.5 THREAD RELIEF ON MACHINED THREADS
BREAK EDGES .016 MAX. ON MACHINED WORK
REMOVE BURRS, WELD SPLATTER & LOOSE SCALE
IN ACCORDANCE WITH ASME Y14.5M & B46.1

SHEET 1 OF 1

PROJECT NO.	PROJECT NAME	CATEGORY CODE	DWG NO.	SIZE	REV.
				B	0003