| REVISIONS | | | | |
|---|---|---|---|---|
| REV | DWG | CHK | DATE | DESCRIPTION |
| 0005 | JHS | | 2012-05-18 | Initial drawing |

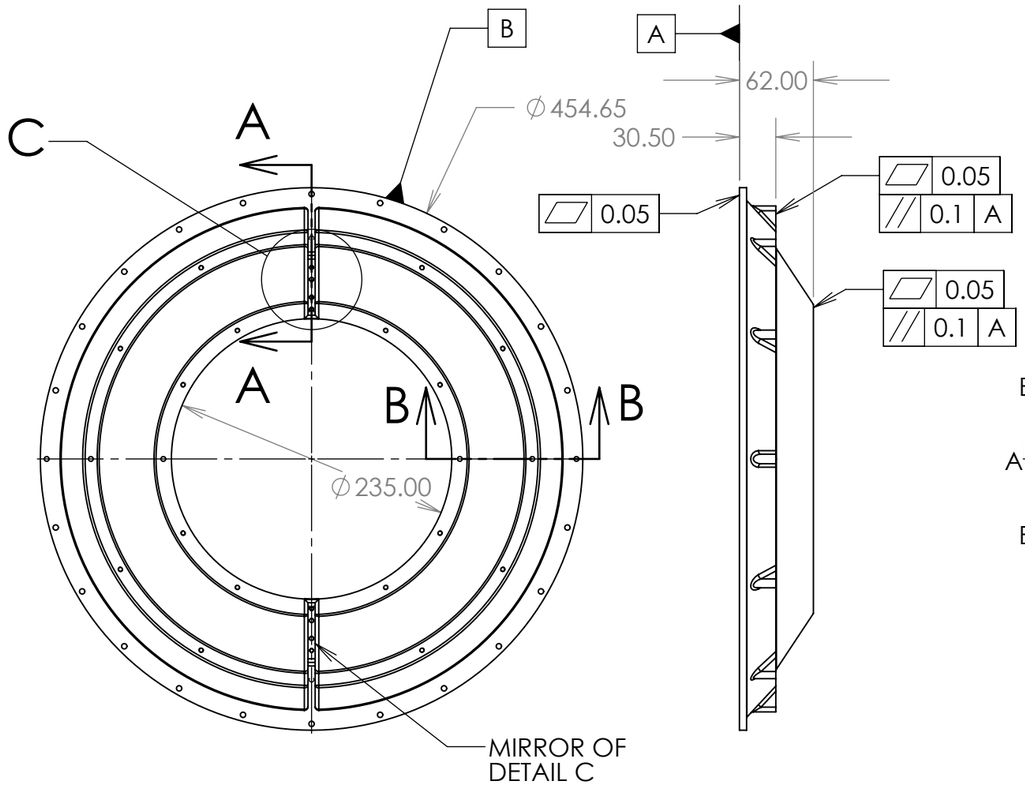


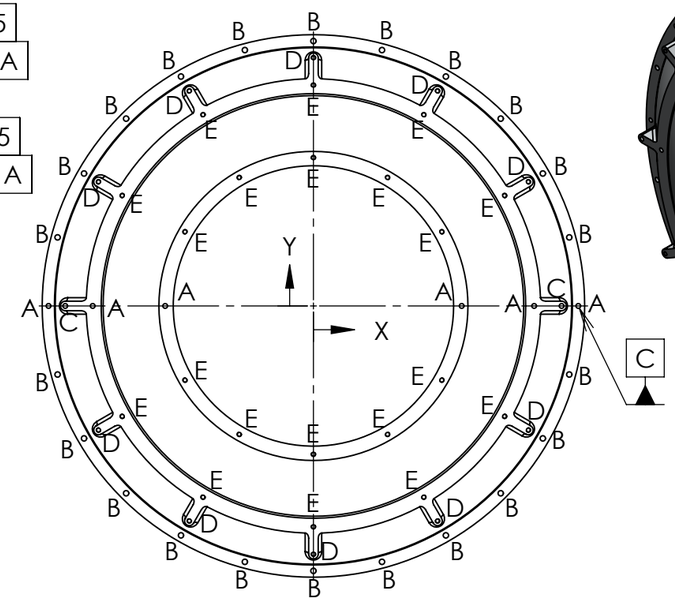


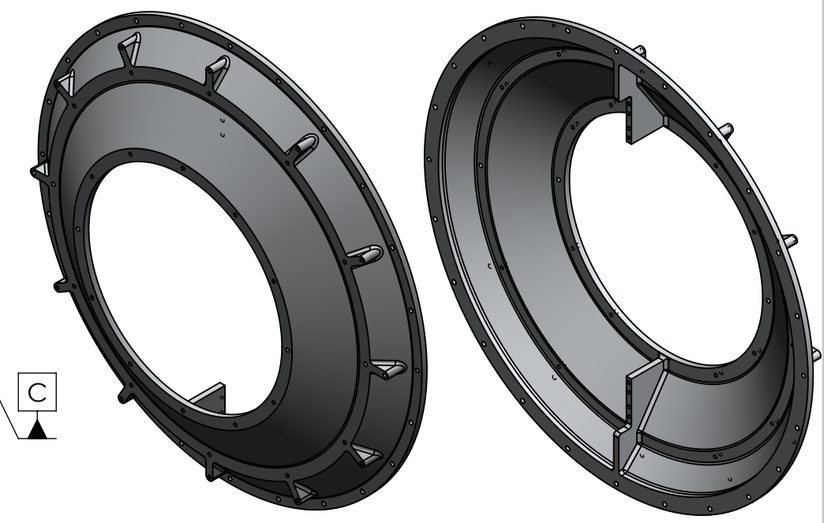

| TAG | SIZE | QUANTITY |
|---|---|---|
| A | ∅ $4.000^{+0.015}_{-0.005}$ THRU ALL<br>⌖ ∅ 0.05 B C | 6 |
| B | ∅ 4.50 THRU ALL<br>⌖ ∅ 0.2 B C | 22 |
| C | ∅ $4.000^{+0.005}_{-0.015}$ ↧ 6.0<br>⌖ ∅ 0.05 B C | 2 |
| D | ∅ 3.30 ↧ 11.5<br>M4X0.7 - 6H ↧ 8.0<br>⌖ ∅ 0.2 B C | 10 |
| E | ∅ 3.30 THRU ALL<br>M4X0.7 - 6H THRU ALL<br>⌖ ∅ 0.2 B C | 20 |

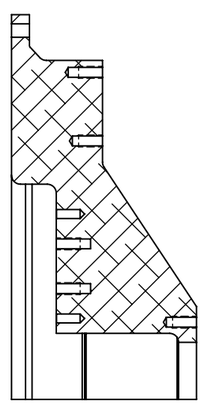

SECTION A-A
SCALE 1 : 2

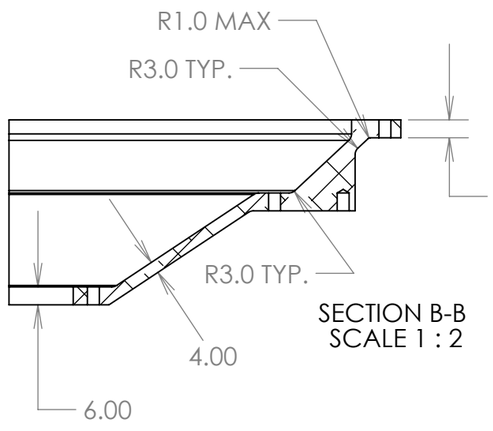


SECTION B-B
SCALE 1 : 2

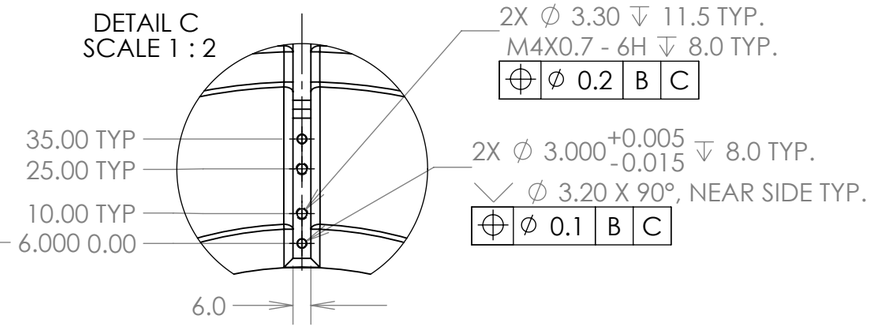


DETAIL C
SCALE 1 : 2

| | |
|---|---|
| MATERIAL | 6061-T6 |
| SURFACE TREATMENT | ANODIZE BLUE |

DIMENSIONS IN MM. UNLESS OTHERWISE SPECIFIED:

| TOLERANCES | | |
|---|---|---|
| | X.X ± 0.5 | FRAC. ± 1/64 |
| | X.XX ± 0.1 | ANGLES ± 1.00° |
| | X.XXX ± 0.05 | FINISH 3.2 (um) |

ERNEST ORLANDO LAWRENCE BERKELEY NATIONAL LABORATORY
UNIVERSITY OF CALIFORNIA - BERKELEY

HFT

MSC_Transition_Plate

| | | | |
|---|---|---|---|
| DWG BY J.H. Silber | DATE 2012-05-18 | SER NO. | SCALE: 1:5 |
| CHK BY | DATE | | |
| APR BY | DATE | | |

THREADS ARE CLASS 2
CHAMFER ENDS OF ALL SCREW THREADS 30°
CUT ROUND, 1.5 THREAD RELIEF ON MACHINED THREADS
BREAK EDGES .016 MAX. ON MACHINED WORK
REMOVE BURRS, WELD SPLATTER & LOOSE SCALE
IN ACCORDANCE WITH ASME Y14.5M & B46.1

SHEET 1 OF 1

| PROJECT NO. | PROJECT NAME | CATEGORY CODE | DWG NO. | SIZE | REV. |
|---|---|---|---|---|---|
| | | | | B | 0005 |