| REVISIONS | | | | |
|---|---|---|---|---|
| REV | DWG | CHK | DATE | DESCRIPTION |
| 0002 | JHS | | 2012-05-01 | Initial drawing |

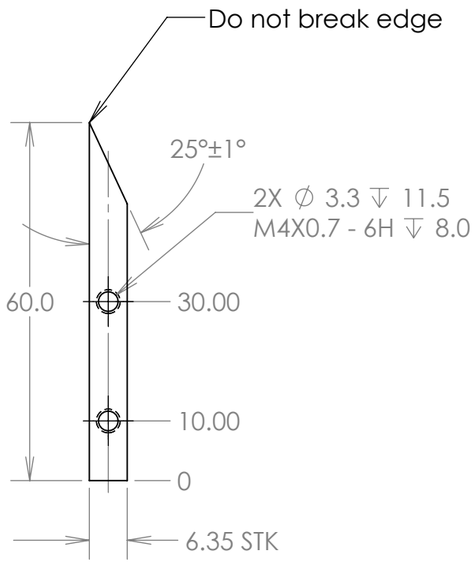


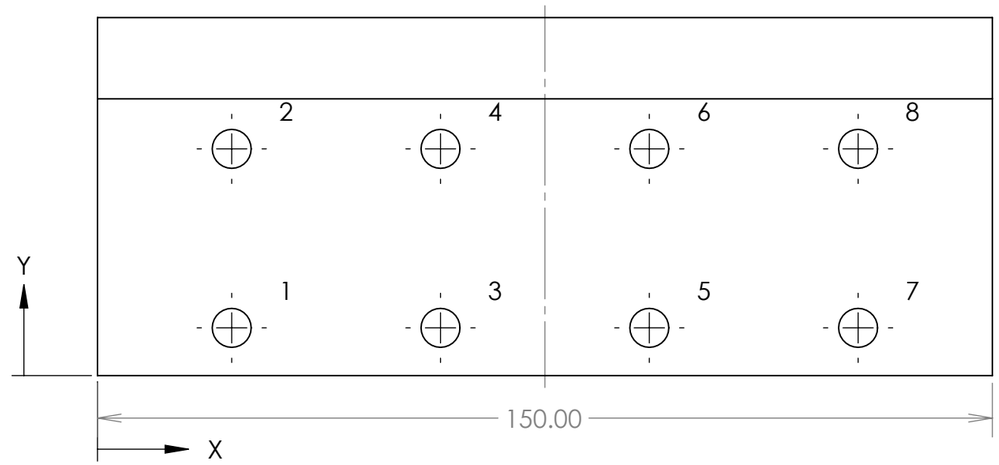


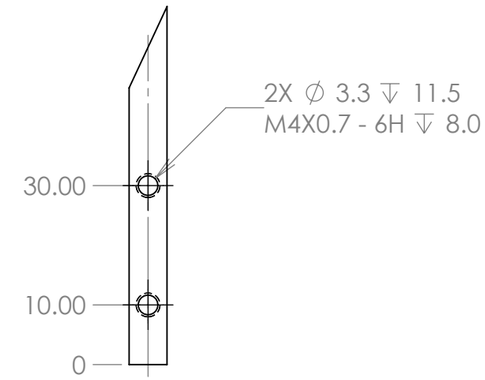


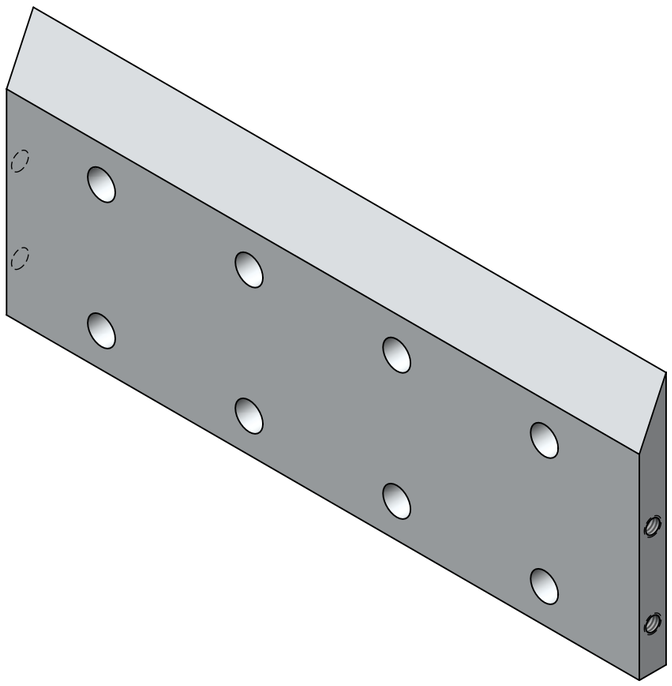

NOTES
1. Anodize (blue or yellow, not black)
2. Do not alodine

| TAG | X LOC | Y LOC | SIZE |
|---|---|---|---|
| 1 | 22.50 | 8.00 | ∅ 6.53 THRU ALL |
| 2 | 22.50 | 38.00 | |
| 3 | 57.50 | 8.00 | |
| 4 | 57.50 | 38.00 | |
| 5 | 92.50 | 8.00 | |
| 6 | 92.50 | 38.00 | |
| 7 | 127.50 | 8.00 | |
| 8 | 127.50 | 38.00 | |

MATERIAL 6061-T6

SURFACE TREATMENT Anodize

DIMENSIONS IN MM. UNLESS OTHERWISE SPECIFIED:

| TOLERANCES | | |
|---|---|---|
| | X.X ± 0.5 | FRAC. ± 1/64 |
| | X.XX ± 0.1 | ANGLES ± 1.00° |
| | X.XXX ± 0.05 | FINISH 3.2 (um) |

ERNEST ORLANDO LAWRENCE BERKELEY NATIONAL LABORATORY
UNIVERSITY OF CALIFORNIA - BERKELEY

testing

Inclined Layup Wedge

| | | | |
|---|---|---|---|
| DWG BY J.H. Silber | DATE 2012-05-01 | SER NO. | SCALE: 1:1 |
| CHK BY | DATE | | |
| APR BY | DATE | | |

THREADS ARE CLASS 2
CHAMFER ENDS OF ALL SCREW THREADS 30°
CUT ROUND, 1.5 THREAD RELIEF ON MACHINED THREADS
BREAK EDGES .016 MAX. ON MACHINED WORK
REMOVE BURRS, WELD SPLATTER & LOOSE SCALE
IN ACCORDANCE WITH ASME Y14.5M & B46.1

SHEET 1 OF 1

| PROJECT NO. | PROJECT NAME | CATEGORY CODE | DWG NO. | SIZE | REV. |
|---|---|---|---|---|---|
| | | | | B | 0002 |