REVISIONS				
REV	DWG	CHK	DATE	DESCRIPTION
0002	JHS		2012-05-01	Initial drawing

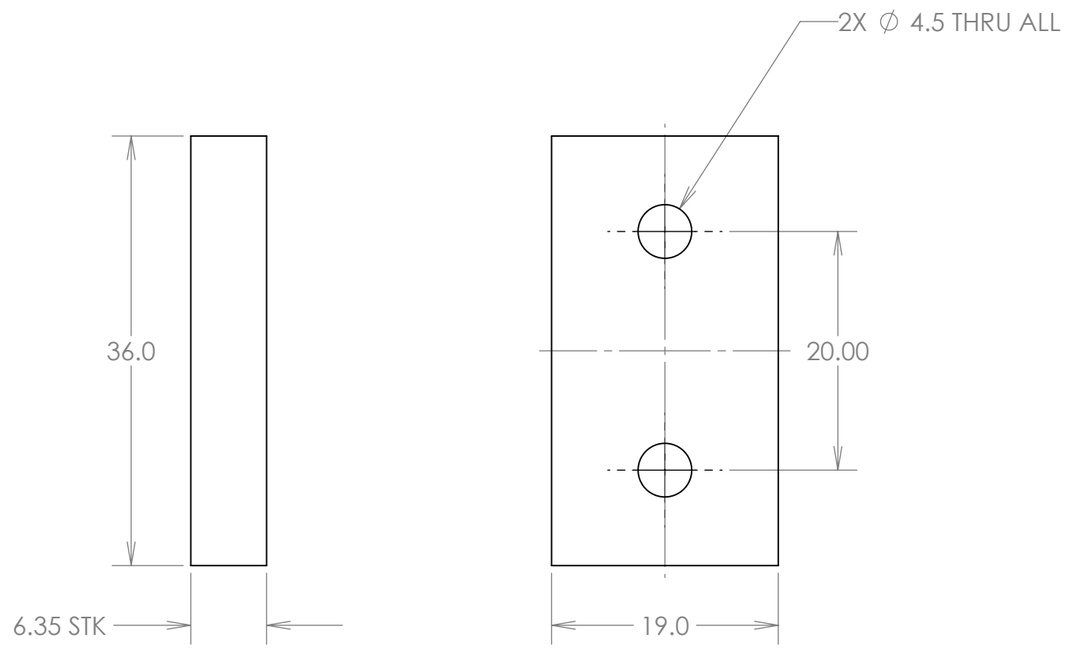

NOTES:
1. Waterjet finish ok on all profiles

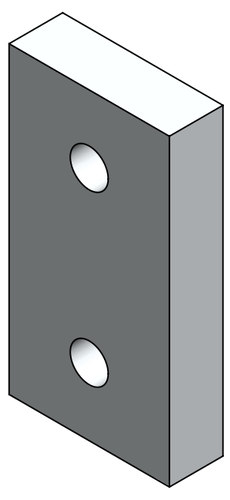

MATERIAL	6061-T6
SURFACE TREATMENT	none

DIMENSIONS IN MM. UNLESS OTHERWISE SPECIFIED:

TOLERANCES		
	X.X ± 0.5	FRAC. ± 1/64
	X.XX ± 0.1	ANGLES ± 1.00°
	X.XXX ± 0.05	FINISH 3.2 (um)

ERNEST ORLANDO LAWRENCE BERKELEY NATIONAL LABORATORY
UNIVERSITY OF CALIFORNIA - BERKELEY

testing

Inclined Layup Wedge Guide Plate

DWG BY	J.H. Silber	DATE	2012-05-01
CHK BY		DATE	
APR BY		DATE	

THREADS ARE CLASS 2
CHAMFER ENDS OF ALL SCREW THREADS 30°
CUT ROUND, 1.5 THREAD RELIEF ON MACHINED THREADS
BREAK EDGES .016 MAX. ON MACHINED WORK
REMOVE BURRS, WELD SPLATTER & LOOSE SCALE
IN ACCORDANCE WITH ASME Y14.5M & B46.1

SER NO.		SCALE: 2:1	SHEET 1 OF 1		
PROJECT NO.	PROJECT NAME	CATEGORY CODE	DWG NO.	SIZE	REV.
				B	0002