REVISIONS				
REV	DWG	CHK	DATE	DESCRIPTION

Configuration:
ESC_WSC

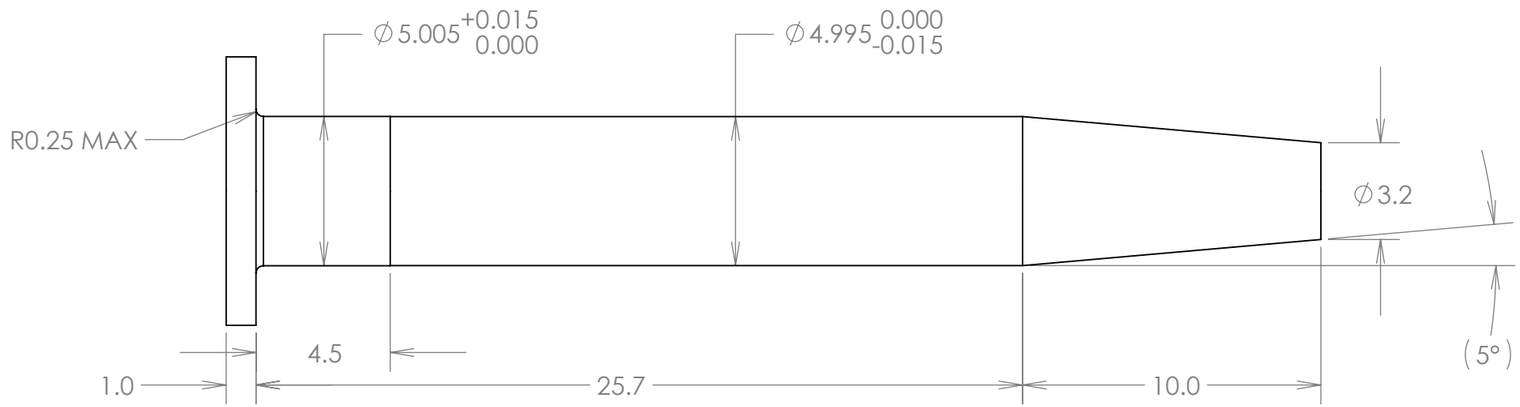

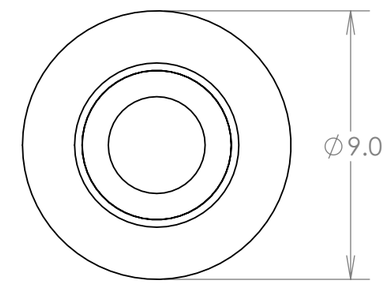

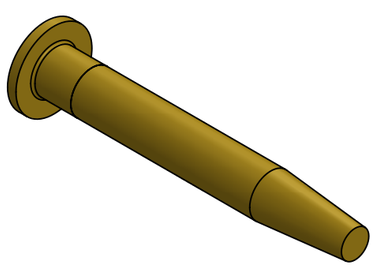

MATERIAL	BRASS 360		
SURFACE TREATMENT			
DIMENSIONS IN MM. UNLESS OTHERWISE SPECIFIED:			
TOLERANCES	X.X ± 0.5	FRAC. ± 1/64	
	X.XX ± 0.1	ANGLES ± 1.00°	
	X.XXX ± 0.05	FINISH 3.2 (um)	

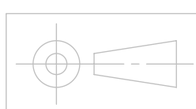

DWG BY J.H. Silber	DATE 2012-03-26	THREADS ARE CLASS 2 CHAMFER ENDS OF ALL SCREW THREADS 30° CUT ROUND, 1.5 THREAD RELIEF ON MACHINED THREADS BREAK EDGES .016 MAX. ON MACHINED WORK REMOVE BURRS, WELD SPLATTER & LOOSE SCALE IN ACCORDANCE WITH ASME Y14.5M & B46.1
CHK BY	DATE	
APR BY	DATE	

ERNEST ORLANDO LAWRENCE BERKELEY NATIONAL LABORATORY
UNIVERSITY OF CALIFORNIA - BERKELEY

HFT

IDS Flange Alignment Pin

SER NO.		SCALE: 5:1	SHEET 1 OF 6	
PROJECT NO.	PROJECT NAME	CATEGORY CODE	DWG NO.	SIZE B / REV. 0002

REVISIONS				
REV	DWG	CHK	DATE	DESCRIPTION

Configuration:
MSC

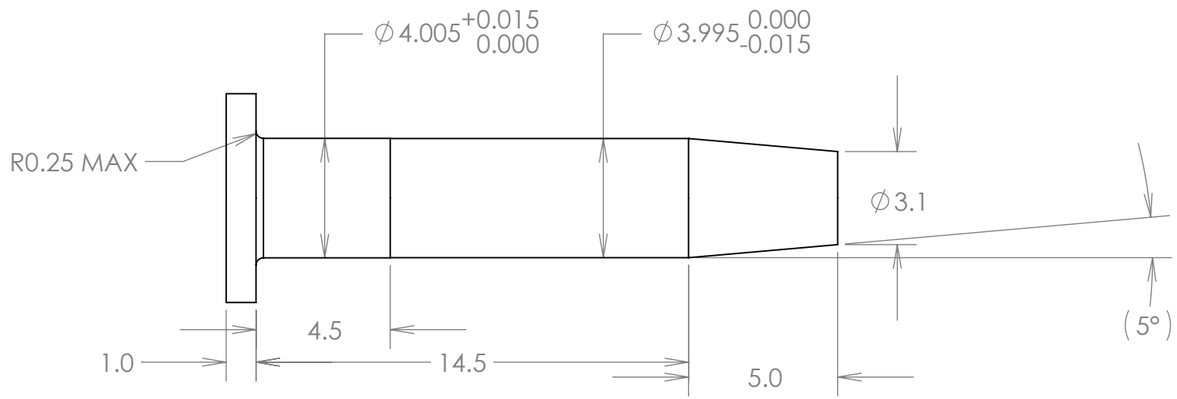

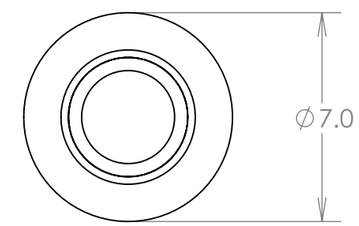

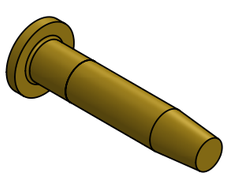

MATERIAL	BRASS 360
SURFACE TREATMENT	

DIMENSIONS IN MM. UNLESS OTHERWISE SPECIFIED:

TOLERANCES		
	X.X ± 0.5	FRAC. ± 1/64
	X.XX ± 0.1	ANGLES ± 1.00°
	X.XXX ± 0.05	FINISH 3.2 (um)

ERNEST ORLANDO LAWRENCE BERKELEY NATIONAL LABORATORY
UNIVERSITY OF CALIFORNIA - BERKELEY

HFT

IDS Flange Alignment Pin

DWG BY J.H. Silber	DATE 2012-03-26
CHK BY	DATE
APR BY	DATE

THREADS ARE CLASS 2
CHAMFER ENDS OF ALL SCREW THREADS 30°
CUT ROUND, 1.5 THREAD RELIEF ON MACHINED THREADS
BREAK EDGES .016 MAX. ON MACHINED WORK
REMOVE BURRS, WELD SPLATTER & LOOSE SCALE
IN ACCORDANCE WITH ASME Y14.5M & B46.1

SER NO.		SCALE: 5:1	SHEET 2 OF 6	
PROJECT NO.	PROJECT NAME	CATEGORY CODE	DWG NO.	SIZE B / REV. 0002

REVISIONS				
REV	DWG	CHK	DATE	DESCRIPTION

Configuration:
MSC no flange

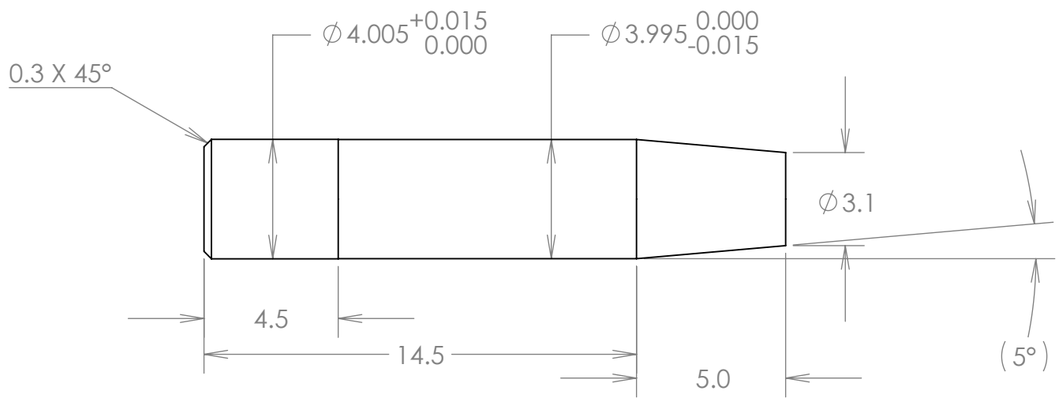

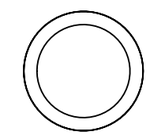

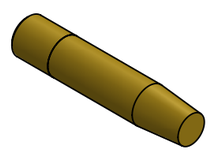

MATERIAL	BRASS 360	
SURFACE TREATMENT		
DIMENSIONS IN MM. UNLESS OTHERWISE SPECIFIED:		
TOLERANCES	X.X ± 0.5	FRAC. ± 1/64
	X.XX ± 0.1	ANGLES ± 1.00°
	X.XXX ± 0.05	FINISH 3.2 (um)

ERNEST ORLANDO LAWRENCE BERKELEY NATIONAL LABORATORY
UNIVERSITY OF CALIFORNIA - BERKELEY

HFT

IDS Flange Alignment Pin

DWG BY J.H. Silber	DATE 2012-03-26	SER NO.	SCALE: 5:1
CHK BY	DATE		
APR BY	DATE		

THREADS ARE CLASS 2
CHAMFER ENDS OF ALL SCREW THREADS 30°
CUT ROUND, 1.5 THREAD RELIEF ON MACHINED THREADS
BREAK EDGES .016 MAX. ON MACHINED WORK
REMOVE BURRS, WELD SPLATTER & LOOSE SCALE
IN ACCORDANCE WITH ASME Y14.5M & B46.1

SHEET 3 OF 6

PROJECT NO.	PROJECT NAME	CATEGORY CODE	DWG NO.	SIZE	REV.
				B	0002

REVISIONS				
REV	DWG	CHK	DATE	DESCRIPTION

Configuration:
MSC short

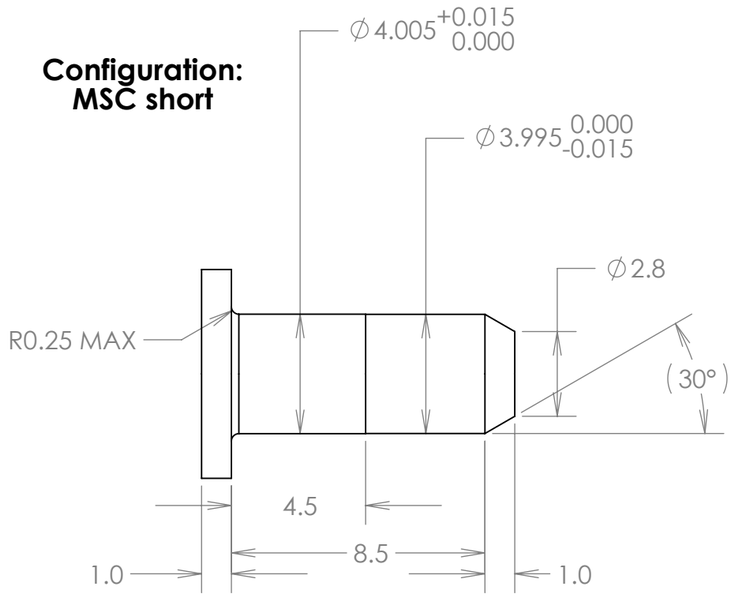

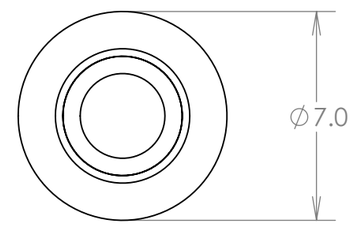

MATERIAL	BRASS 360		
SURFACE TREATMENT			
DIMENSIONS IN MM. UNLESS OTHERWISE SPECIFIED:			
TOLERANCES	X.X ± 0.5	FRAC. ± 1/64	
	X.XX ± 0.1	ANGLES ± 1.00°	
	X.XXX ± 0.05	FINISH 3.2 (um)	

DWG BY J.H. Silber	DATE 2012-03-26	THREADS ARE CLASS 2 CHAMFER ENDS OF ALL SCREW THREADS 30° CUT ROUND, 1.5 THREAD RELIEF ON MACHINED THREADS BREAK EDGES .016 MAX. ON MACHINED WORK REMOVE BURRS, WELD SPLATTER & LOOSE SCALE IN ACCORDANCE WITH ASME Y14.5M & B46.1
CHK BY	DATE	
APR BY	DATE	

ERNEST ORLANDO LAWRENCE BERKELEY NATIONAL LABORATORY
UNIVERSITY OF CALIFORNIA - BERKELEY

HFT

IDS Flange Alignment Pin

SER NO.		SCALE: 5:1	SHEET 4 OF 6	
PROJECT NO.	PROJECT NAME	CATEGORY CODE	DWG NO.	SIZE B / REV. 0002

REVISIONS				
REV	DWG	CHK	DATE	DESCRIPTION

Configuration:
East cone

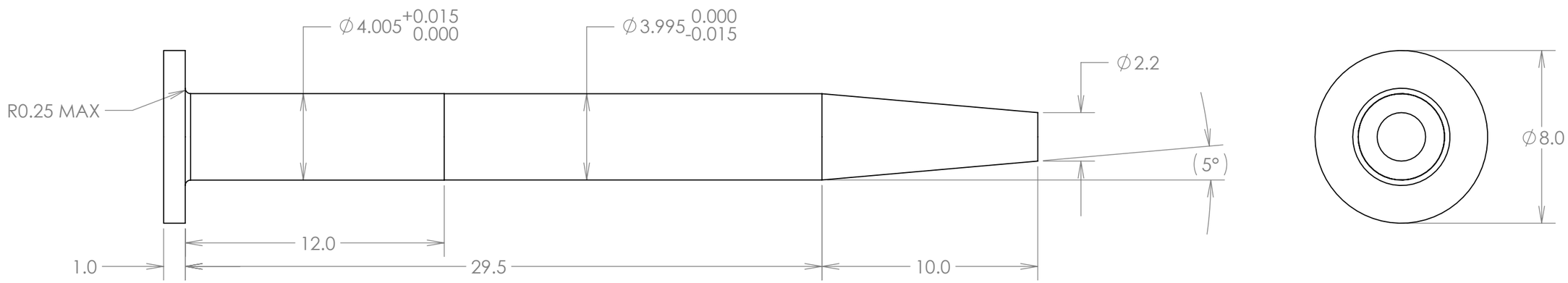

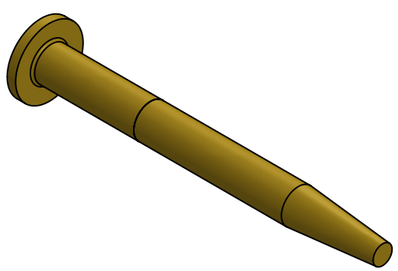

MATERIAL	BRASS 360		
SURFACE TREATMENT			
DIMENSIONS IN MM. UNLESS OTHERWISE SPECIFIED:			
TOLERANCES	X.X ± 0.5	FRAC. ± 1/64	
	X.XX ± 0.1	ANGLES ± 1.00°	
	X.XXX ± 0.05	FINISH 3.2 (um)	

DWG BY J.H. Silber	DATE 2012-03-26
CHK BY	DATE
APR BY	DATE

THREADS ARE CLASS 2
CHAMFER ENDS OF ALL SCREW THREADS 30°
CUT ROUND, 1.5 THREAD RELIEF ON MACHINED THREADS
BREAK EDGES .016 MAX. ON MACHINED WORK
REMOVE BURRS, WELD SPLATTER & LOOSE SCALE
IN ACCORDANCE WITH ASME Y14.5M & B46.1

ERNEST ORLANDO LAWRENCE BERKELEY NATIONAL LABORATORY
UNIVERSITY OF CALIFORNIA - BERKELEY

HFT

IDS Flange Alignment Pin

SER NO.		SCALE: 5:1	SHEET 5 OF 6	
PROJECT NO.	PROJECT NAME	CATEGORY CODE	DWG NO.	SIZE B / REV. 0002

REVISIONS				
REV	DWG	CHK	DATE	DESCRIPTION

Configuration:
West cone

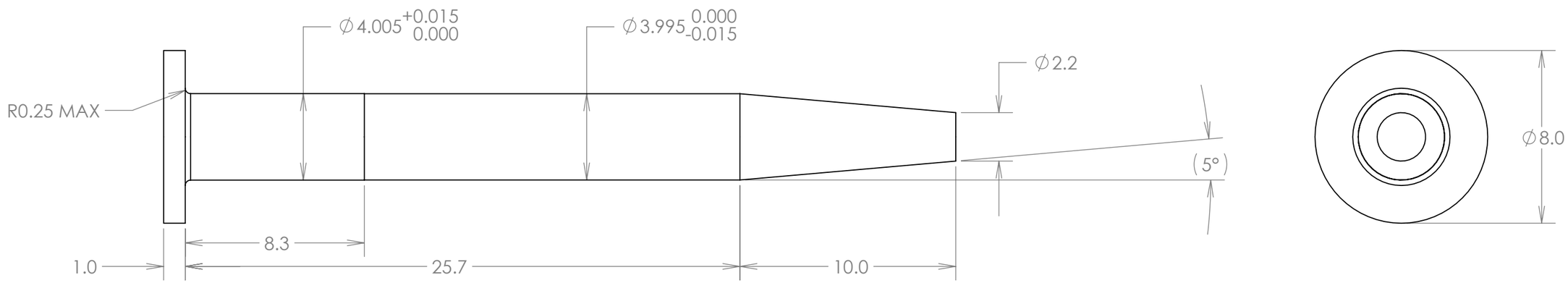

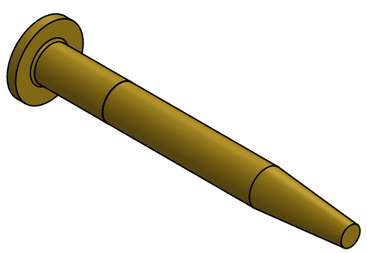

MATERIAL	BRASS 360	
SURFACE TREATMENT		
DIMENSIONS IN MM. UNLESS OTHERWISE SPECIFIED:		
TOLERANCES	X.X ± 0.5	FRAC. ± 1/64
	X.XX ± 0.1	ANGLES ± 1.00°
	X.XXX ± 0.05	FINISH 3.2 (um)

ERNEST ORLANDO LAWRENCE BERKELEY NATIONAL LABORATORY
UNIVERSITY OF CALIFORNIA - BERKELEY

HFT

IDS Flange Alignment Pin

DWG BY J.H. Silber	DATE 2012-03-26		
CHK BY	DATE		
APR BY	DATE		

THREADS ARE CLASS 2
CHAMFER ENDS OF ALL SCREW THREADS 30°
CUT ROUND, 1.5 THREAD RELIEF ON MACHINED THREADS
BREAK EDGES .016 MAX. ON MACHINED WORK
REMOVE BURRS, WELD SPLATTER & LOOSE SCALE
IN ACCORDANCE WITH ASME Y14.5M & B46.1

SER NO.		SCALE: 5:1	SHEET 6 OF 6		
PROJECT NO.	PROJECT NAME	CATEGORY CODE	DWG NO.	SIZE	REV.
				B	0002