REVISIONS				
REV	DWG	CHK	DATE	DESCRIPTION

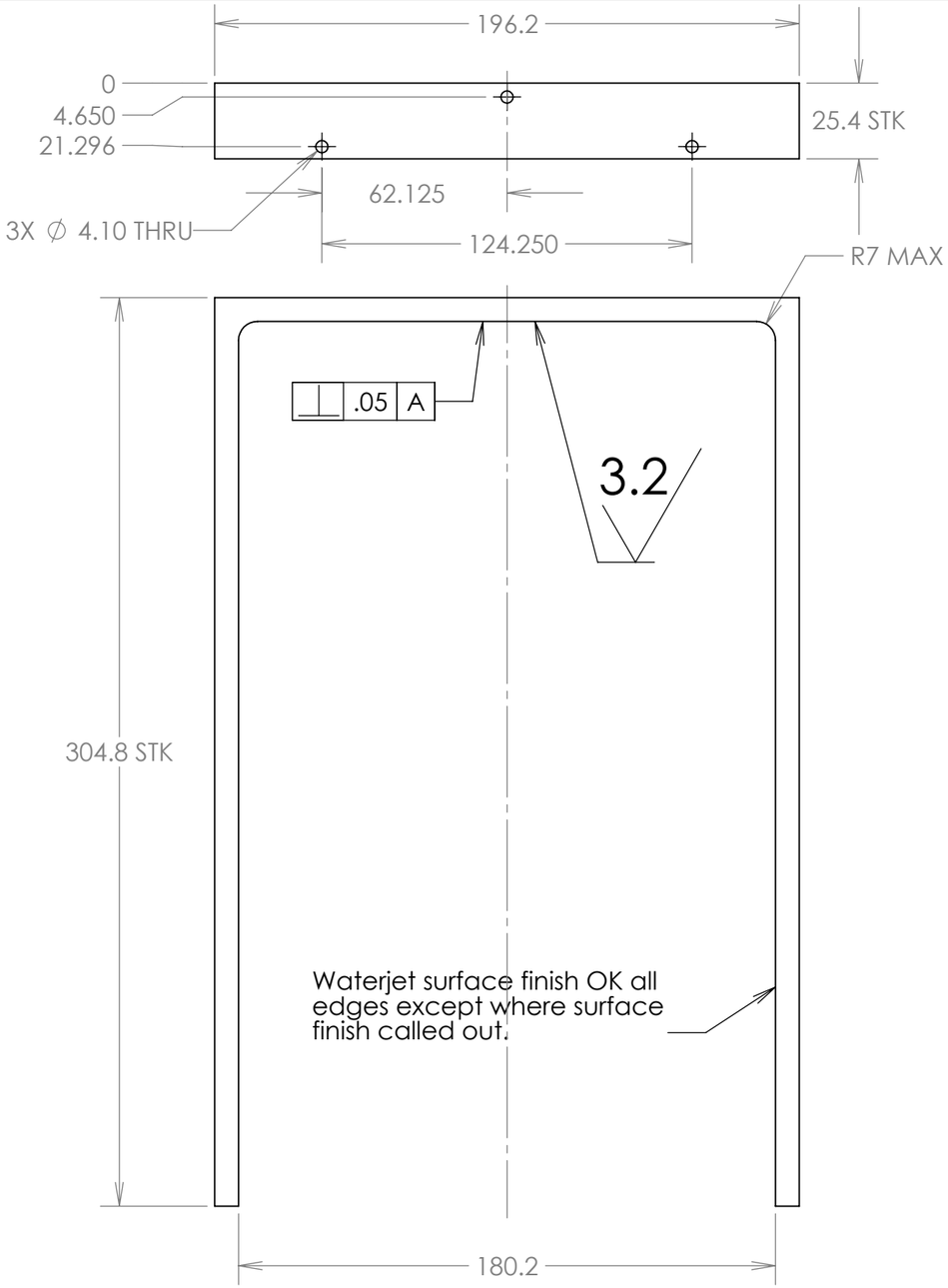

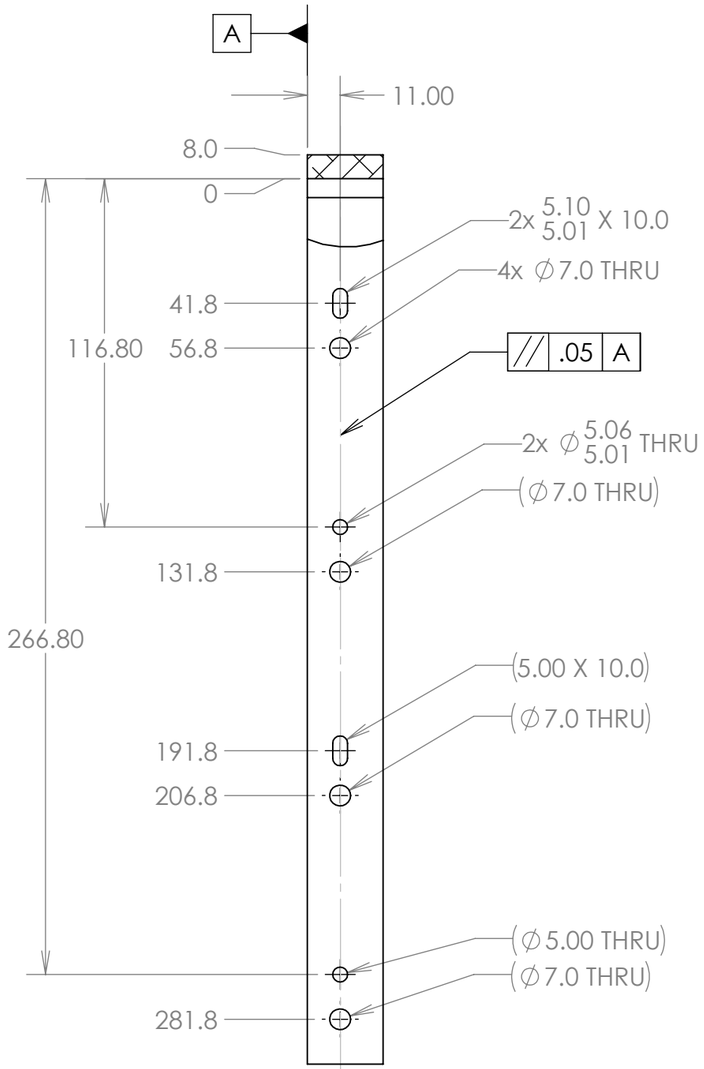

Configuration: Frame

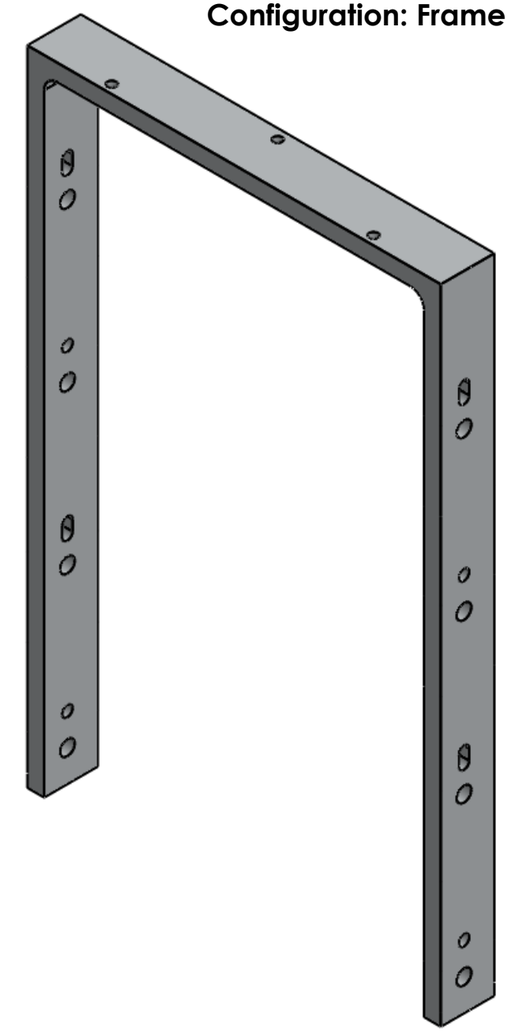

MATERIAL	MIC 6
SURFACE TREATMENT	

DIMENSIONS IN MM. UNLESS OTHERWISE SPECIFIED:

TOLERANCES		
	X.X ± 0.5	FRAC. ± 1/64
	X.XX ± 0.1	ANGLES ± 1.00°
	X.XXX ± 0.05	FINISH 3.2 (um)

ERNEST ORLANDO LAWRENCE BERKELEY NATIONAL LABORATORY
UNIVERSITY OF CALIFORNIA - BERKELEY

tooling

PST Window Trim Tool

DWG BY J.H. Silber	DATE 2012-03-01	SER NO.	SCALE: 1:2
CHK BY	DATE		
APR BY	DATE		

THREADS ARE CLASS 2
CHAMFER ENDS OF ALL SCREW THREADS 30°
CUT ROUND, 1.5 THREAD RELIEF ON MACHINED THREADS
BREAK EDGES .016 MAX. ON MACHINED WORK
REMOVE BURRS, WELD SPLATTER & LOOSE SCALE
IN ACCORDANCE WITH ASME Y14.5M & B46.1

PROJECT NO.	PROJECT NAME	CATEGORY CODE	DWG NO.	SIZE	REV.
			SHEET 1 OF 2	B	0003

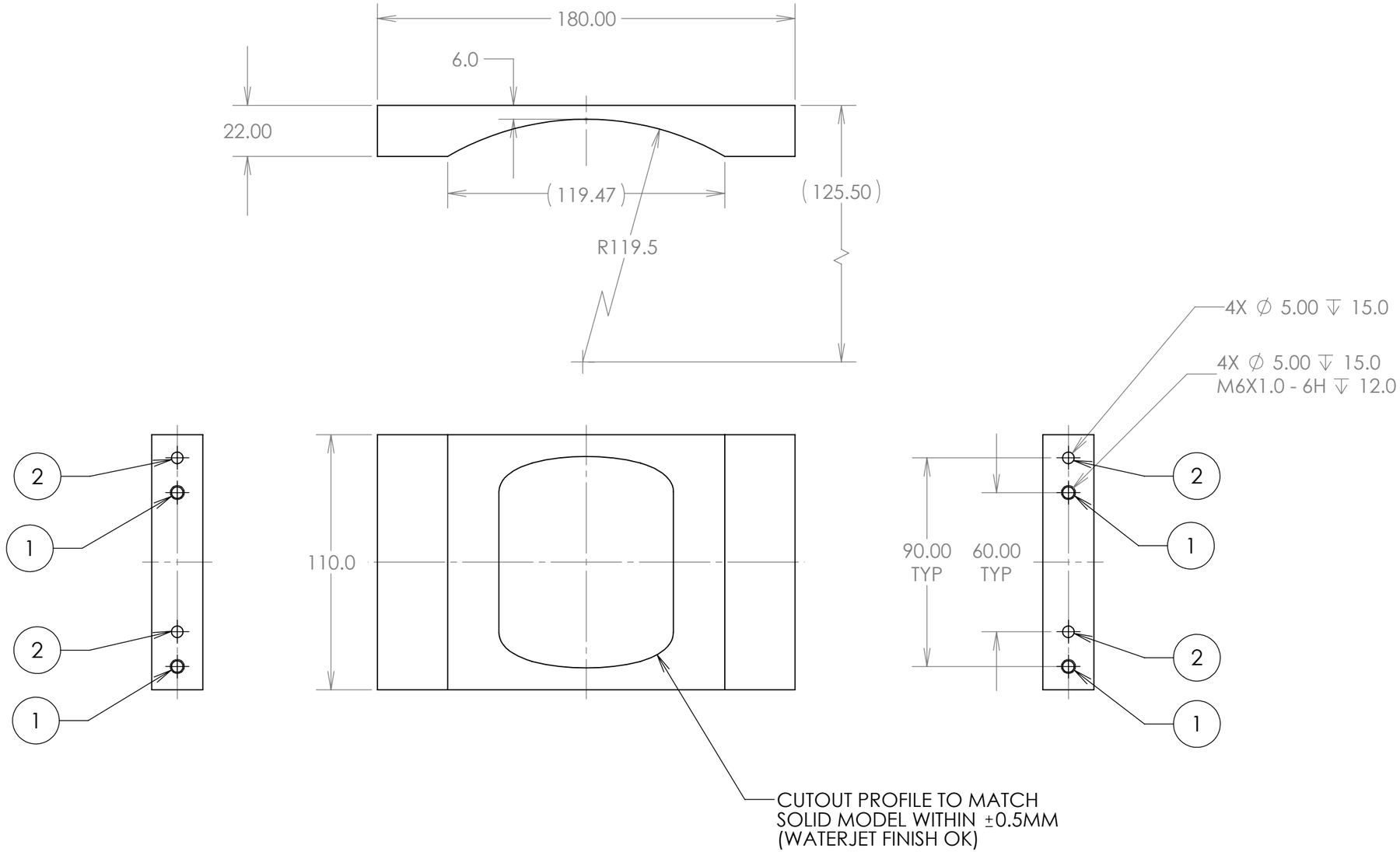

Configuration: Window

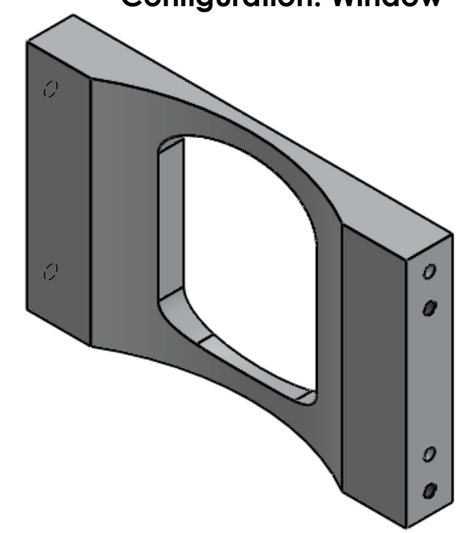

(1) M6x1.0 tapped

(2) 5.0 hole (for dowel pin)

MATERIAL 6061-T6		ERNEST ORLANDO LAWRENCE BERKELEY NATIONAL LABORATORY UNIVERSITY OF CALIFORNIA - BERKELEY	
SURFACE TREATMENT		tooling	
DIMENSIONS IN MM. UNLESS OTHERWISE SPECIFIED:		PST Window Trim Tool	
TOLERANCES: X.X ± 0.5	FRAC. ± 1/64		
X.XX ± 0.1	ANGLES ± 1.00°		
X.XXX ± 0.05	FINISH 3.2 (um)		
DWG BY J.H. Silber	DATE 2012-03-01	SER NO.	SCALE: 1:2 / SHEET 2 OF 2
CHK BY	DATE	PROJECT NO. / PROJECT NAME	CATEGORY CODE / DWG NO. / SIZE B / REV. 0003
APR BY	DATE		

THREADS ARE CLASS 2
CHAMFER ENDS OF ALL SCREW THREADS 30°
CUT ROUND, 1.5 THREAD RELIEF ON MACHINED THREADS
BREAK EDGES .016 MAX. ON MACHINED WORK
REMOVE BURRS, WELD SPLATTER & LOOSE SCALE
IN ACCORDANCE WITH ASME Y14.5M & B46.1