REVISIONS				
REV	DWG	CHK	DATE	DESCRIPTION
1	JHS	JHS	2011-06-10	Initial drawing.
2	JHS	JHS	2011-12-16	Turned one hole into slot, loosened tols.

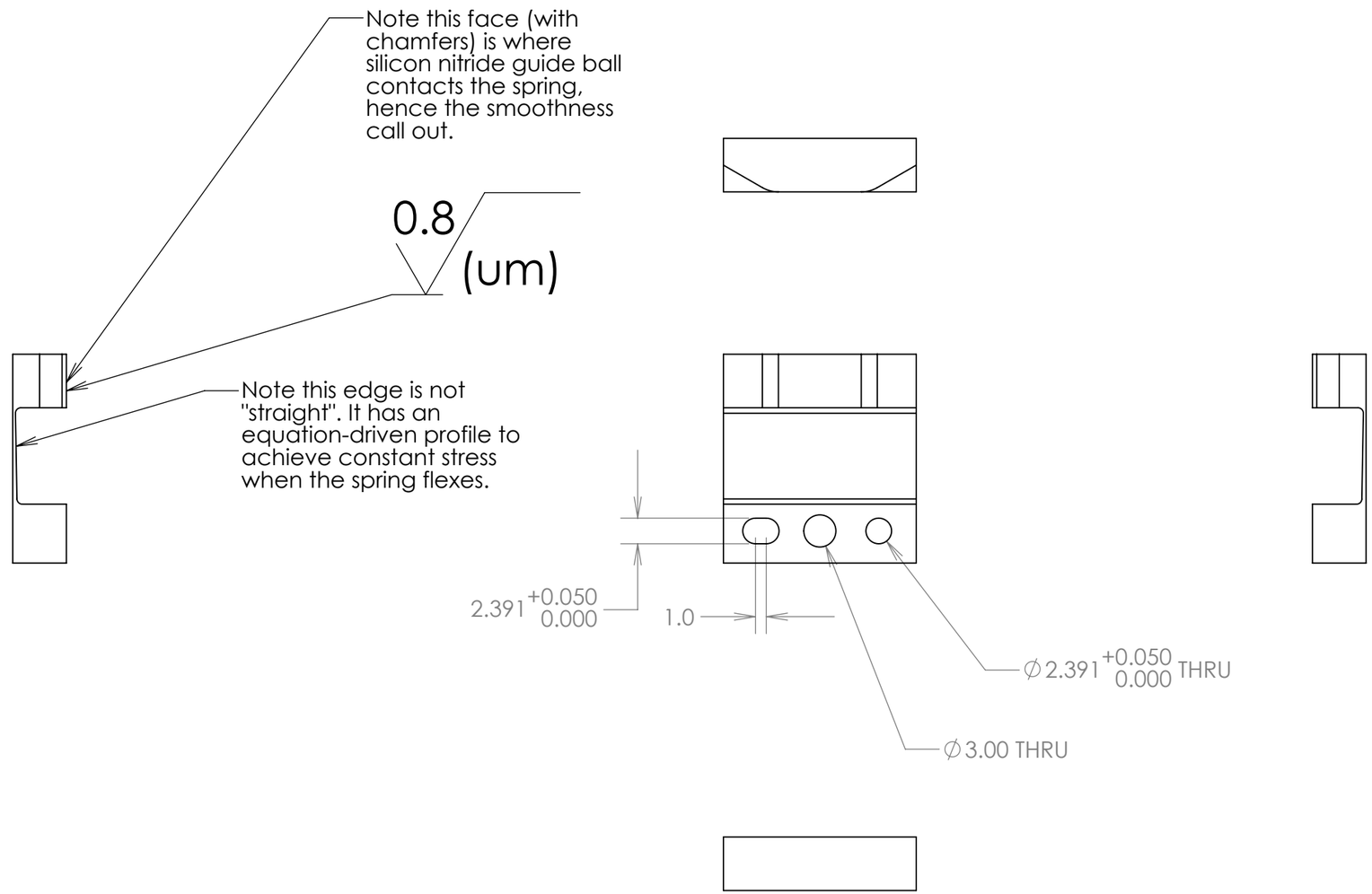

MATERIAL Ti 6Al-4V

SURFACE TREATMENT

DIMENSIONS IN MM. UNLESS OTHERWISE SPECIFIED:

TOLERANCES		
	X.X ± 0.5	FRAC. ± 1/64
	X.XX ± 0.1	ANGLES ± 1.00°
	X.XXX ± 0.05	FINISH 3.2 (um)

ERNEST ORLANDO LAWRENCE BERKELEY NATIONAL LABORATORY
UNIVERSITY OF CALIFORNIA - BERKELEY

kin_spring_bot

DWG BY Joe Silber	DATE 2011-06-10		
CHK BY Joe Silber	DATE 2011-06-10		
APR BY Joe Silber	DATE 2011-06-10		

THREADS ARE CLASS 2
CHAMFER ENDS OF ALL SCREW THREADS 30°
CUT ROUND, 1.5 THREAD RELIEF ON MACHINED THREADS
BREAK EDGES .016 MAX. ON MACHINED WORK
REMOVE BURRS, WELD SPLATTER & LOOSE SCALE
IN ACCORDANCE WITH ASME Y14.5M & B46.1

SER NO.		SCALE: 2:1	SHEET 1 OF 1	
PROJECT NO.	PROJECT NAME	CATEGORY CODE	DWG NO.	SIZE B / REV. 2