Configuration: Default

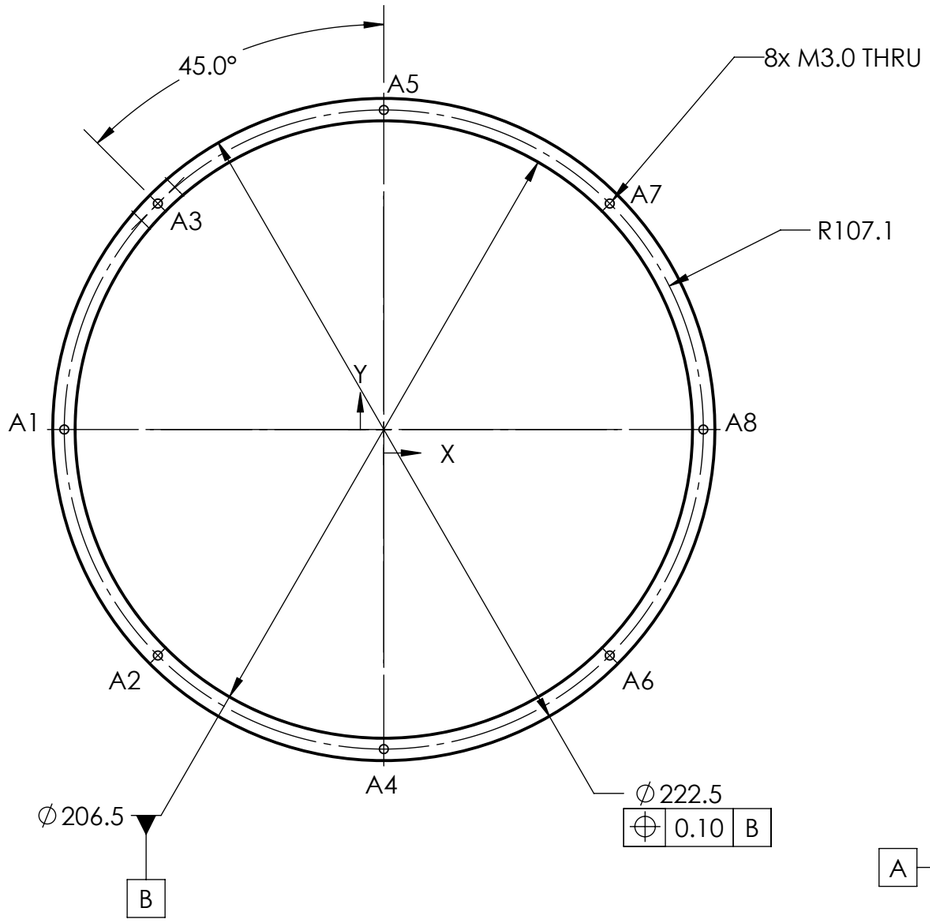

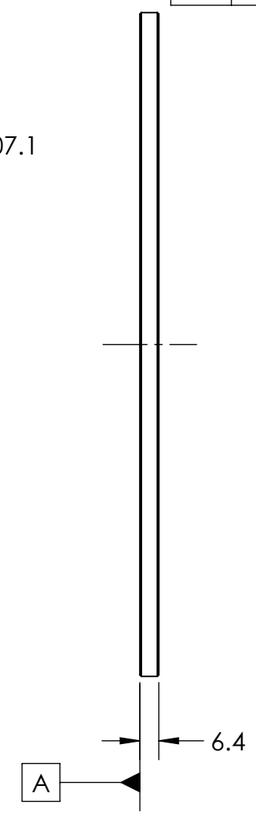

REVISIONS

ZONE	REV.	DESCRIPTION	DATE	DRAWNBY	APPROVED
	A	INITIAL RELEASE	6/7/2011	C. MORAN	J. BESSUILLE
	B	Added #10-24 Holes	10/11/2011	C. MORAN	
	C	Fixed OD, stock thickness 1/4", material PEEK, show hole table	2011-10-11	J. Silber	

TAG	X LOC	Y LOC	SIZE
A1	-107.13	0.00	∅ 2.5 THRU ALL M3X0.5 - 6H THRU ALL
A2	-75.75	-75.75	
A3	-75.75	75.75	
A4	-0.00	-107.13	
A5	0.00	107.13	
A6	75.75	-75.75	
A7	75.75	75.75	
A8	107.13	-0.00	

METRIC

WEIGHT IN KILOGRAMS.

0.04

THIRD ANGLE PROJECTION

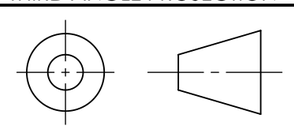

MATERIAL:
Polyetheretherketone (PEEK)

SHOP NOTES: - DO NOT SCALE DRAWING.
- BREAK ALL SHARP EDGES.

SURFACE FINISH: - √ MAXIMUM, ALL MACHINED SURFACES

APPROVALS:		DATE:
ORIGINATOR:	J. BESSUILLE	05/01/11
DRAWN BY:	C. MORAN	06/07/11
CHECKED BY:	J. BESSUILLE	06/09/11
APPROVED BY:	J. BESSUILLE	06/09/11

UNLESS OTHERWISE SPECIFIED, DIMENSIONS ARE IN MILLIMETERS.

DECIMALS: X.= ±0.25
X.X=±.125
X.XX=±.025

ANGLES: =±0°30'

NEXT ASSEMBLY:
IDS WSC MAIN FLANGE STIFFENER ASSY

SolidWorks GENERATED DRAWING.
FILE LOCATION AND NAME:
IDS WSC COOLING TUBE SUPPORT RING

MASSACHUSETTS INSTITUTE OF TECHNOLOGY
LABORATORY FOR NUCLEAR SCIENCE
BATES LINEAR ACCELERATOR CENTER

IDS WSC COOLING TUBE SUPPORT RING, STAR, FGT

SCALE:	PROJECT #:	SIZE:	DRAWING #:	SHEET #:	REV:
1:2	STAR Experiment 2011	B	IDS WSC COOLING TUBE SUPPORT RING	1 OF 2	C

Configuration: ESC

REVISIONS					
ZONE	REV.	DESCRIPTION	DATE	DRAWNBY	APPROVED
	A	INITIAL RELEASE	6/7/2011	C. MORAN	J. BESSUILLE
	B	Added #10-24 Holes	10/11/2011	Bessuille	
	C	Increase width of ring 1.5 ID and 1.5 OD	10/11/2011	Bessuille	

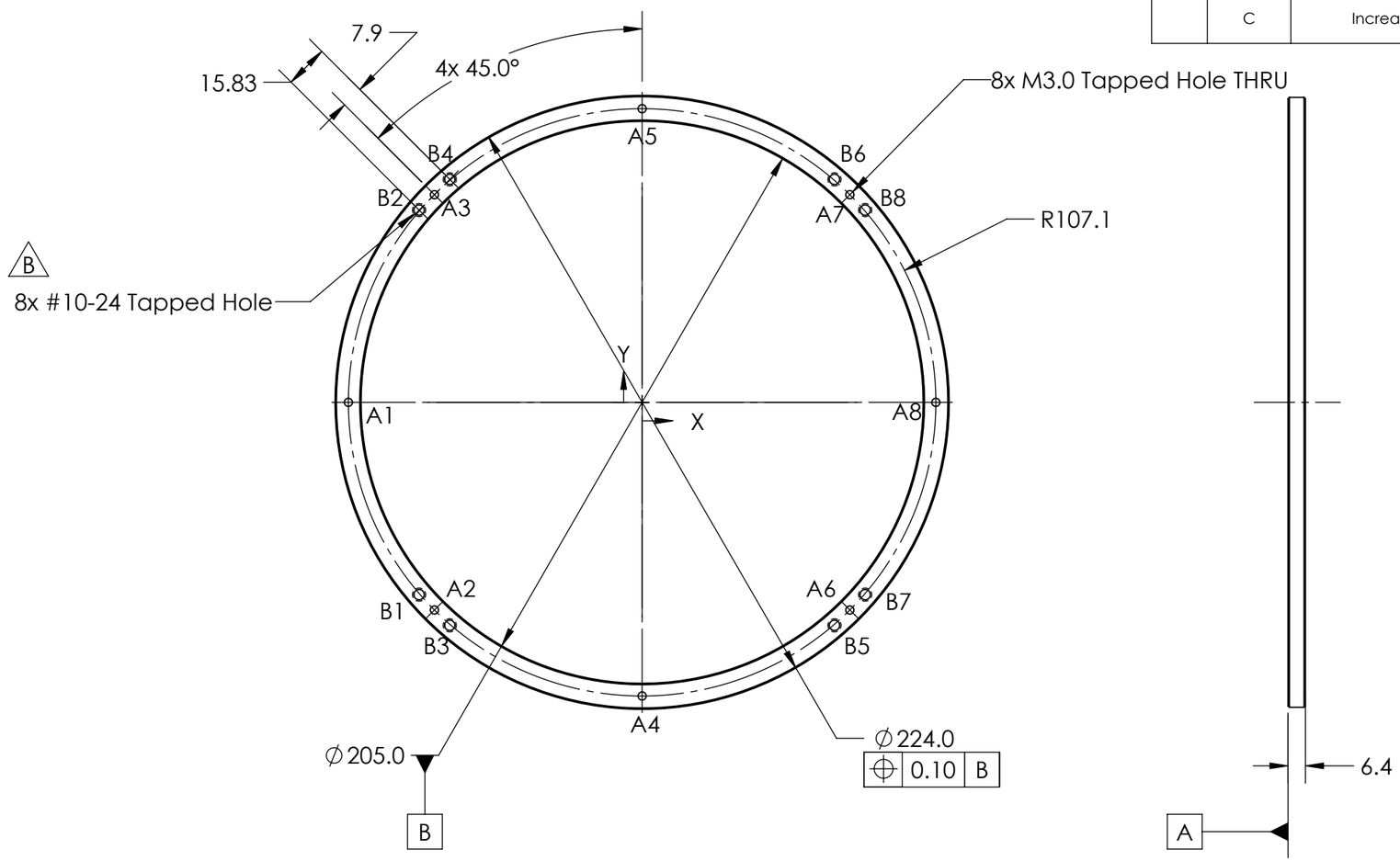

TAG	X LOC	Y LOC	SIZE
A1	-107.13	0.00	∅ 2.50 THRU ALL M3X0.5 - 6H THRU ALL
A2	-75.75	-75.75	
A3	-75.75	75.75	
A4	-0.00	-107.13	
A5	0.00	107.13	
A6	75.75	-75.75	
A7	75.75	75.75	
A8	107.13	-0.00	
B1	-81.35	-70.15	∅ 3.80 THRU ALL 10-24 UNC THRU ALL
B2	-81.35	70.15	
B3	-70.15	-81.35	
B4	-70.15	81.35	
B5	70.15	-81.35	
B6	70.15	81.35	
B7	81.35	-70.15	
B8	81.35	70.15	

METRIC

WEIGHT IN KILOGRAMS.

0.04

THIRD ANGLE PROJECTION

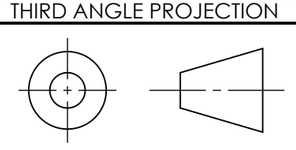

MATERIAL:
Polyetheretherketone (PEEK)

SHOP NOTES: - DO NOT SCALE DRAWING. - BREAK ALL SHARP EDGES.

SURFACE FINISH: - √ MAXIMUM, ALL MACHINED SURFACES

APPROVALS:		DATE:
ORIGINATOR:	J. BESSUILLE	05/01/11
DRAWN BY:	C. MORAN	06/07/11
CHECKED BY:	J. BESSUILLE	06/09/11
APPROVED BY:	J. BESSUILLE	06/09/11

UNLESS OTHERWISE SPECIFIED, DIMENSIONS ARE IN MILLIMETERS.
DECIMALS: X.= ±0.25, X.X= ±.125, X.XX= ±.025
ANGLES: = ±0°30'

NEXT ASSEMBLY:
IDS WSC MAIN FLANGE STIFFENER ASSY

SolidWorks GENERATED DRAWING.
FILE LOCATION AND NAME:
IDS WSC COOLING TUBE SUPPORT RING

MASSACHUSETTS INSTITUTE OF TECHNOLOGY
LABORATORY FOR NUCLEAR SCIENCE
BATES LINEAR ACCELERATOR CENTER

IDS ESC Main Flange Stiffener Inner Backing Ring

SCALE:	PROJECT #:	SIZE:	DRAWING #:	SHEET #:	REV:
1:2	STAR Experiment 2011	B	IDS WSC COOLING TUBE SUPPORT RING	2 OF 2	C