REVISIONS				
REV	DWG	CHK	DATE	DESCRIPTION

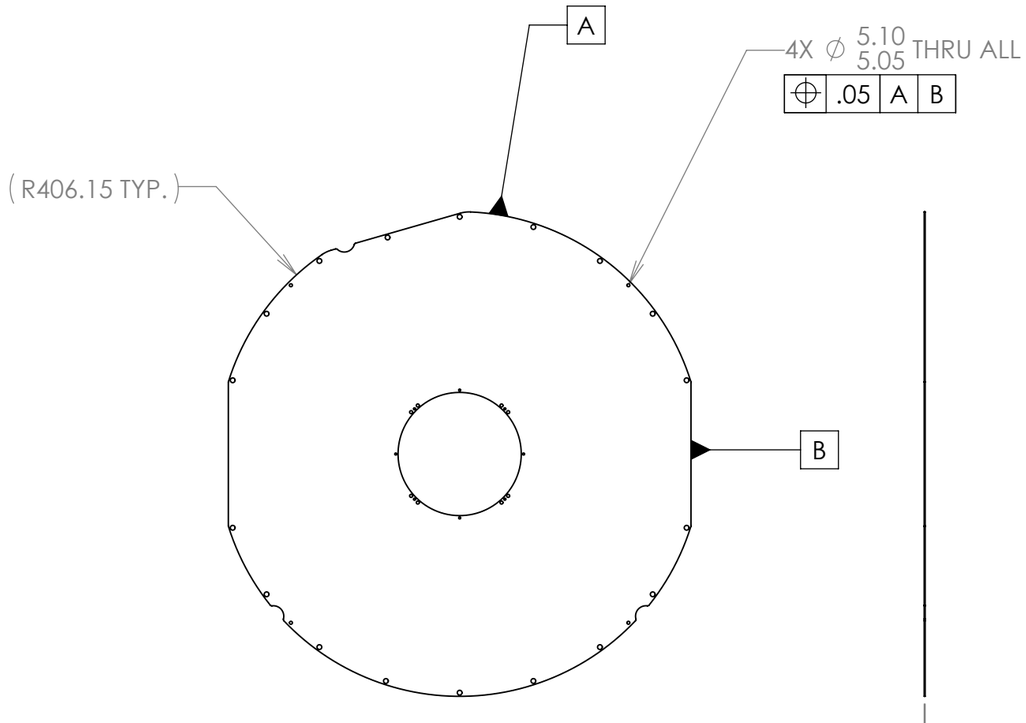

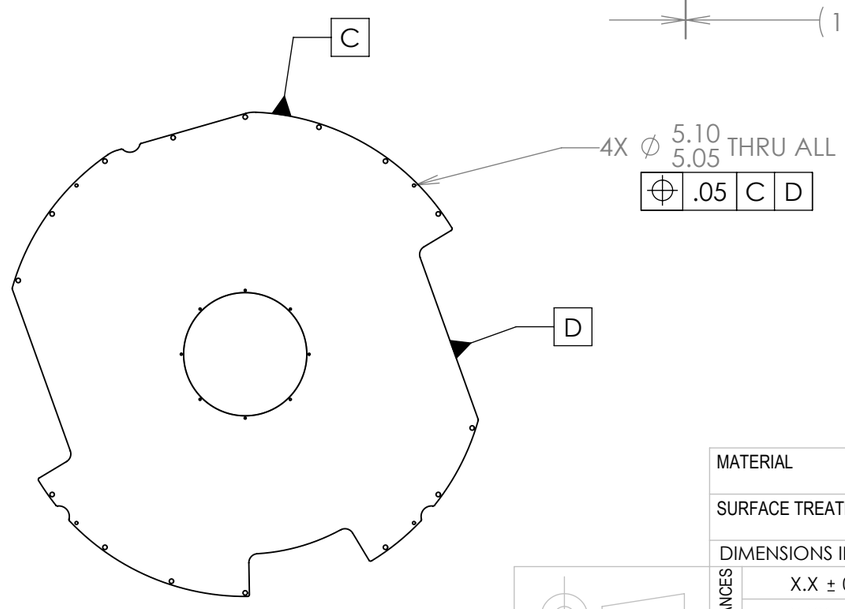

Tolerances on all holes besides the 4x ∅5mm holes are ±0.125mm on diameter and position.

Carbon fiber laminate will be provided.

MATERIAL

SURFACE TREATMENT

DIMENSIONS IN MM. UNLESS OTHERWISE SPECIFIED:

TOLERANCES		
	X.X ± 0.5	FRAC. ± 1/64
	X.XX ± 0.1	ANGLES ± 1.00°
	X.XXX ± 0.05	FINISH 3.2 (um)

ERNEST ORLANDO LAWRENCE BERKELEY NATIONAL LABORATORY
UNIVERSITY OF CALIFORNIA - BERKELEY

STAR Experiment 2010

IDS ESC Main Flange Stiffener

DWG BY Silber	DATE 2011-11-11	
CHK BY Silber	DATE 2011-11-11	
APR BY Silber	DATE 2011-11-11	

THREADS ARE CLASS 2
CHAMFER ENDS OF ALL SCREW THREADS 30°
CUT ROUND, 1.5 THREAD RELIEF ON MACHINED THREADS
BREAK EDGES .016 MAX. ON MACHINED WORK
REMOVE BURRS, WELD SPLATTER & LOOSE SCALE
IN ACCORDANCE WITH ASME Y14.5M & B46.1

SER NO.		SCALE: 1:10	SHEET 1 OF 1	
PROJECT NO.	PROJECT NAME	CATEGORY CODE	DWG NO. IDS ESC MAIN FLANGE STIFFENER	SIZE B / REV. A+