REVISIONS				
REV	DWG	CHK	DATE	DESCRIPTION
0	JHS	JHS	2011-09-05	Initial drawing

TAG	X LOC	Y LOC	SIZE
1	4.034	7.299	$\varnothing .375^{+.002}_{-.000}$ THRU
2	9.660	1.673	
3	34.250	1.673	
4	32.750	.500	$\varnothing$ .406±.010 THRU
5	32.750	2.000	
6	34.250	.500	

Waterjet surface finish OK on all edges except holes and (1) .
DXF of front profile will be provided.

Ream holes tagged 1,2,3.

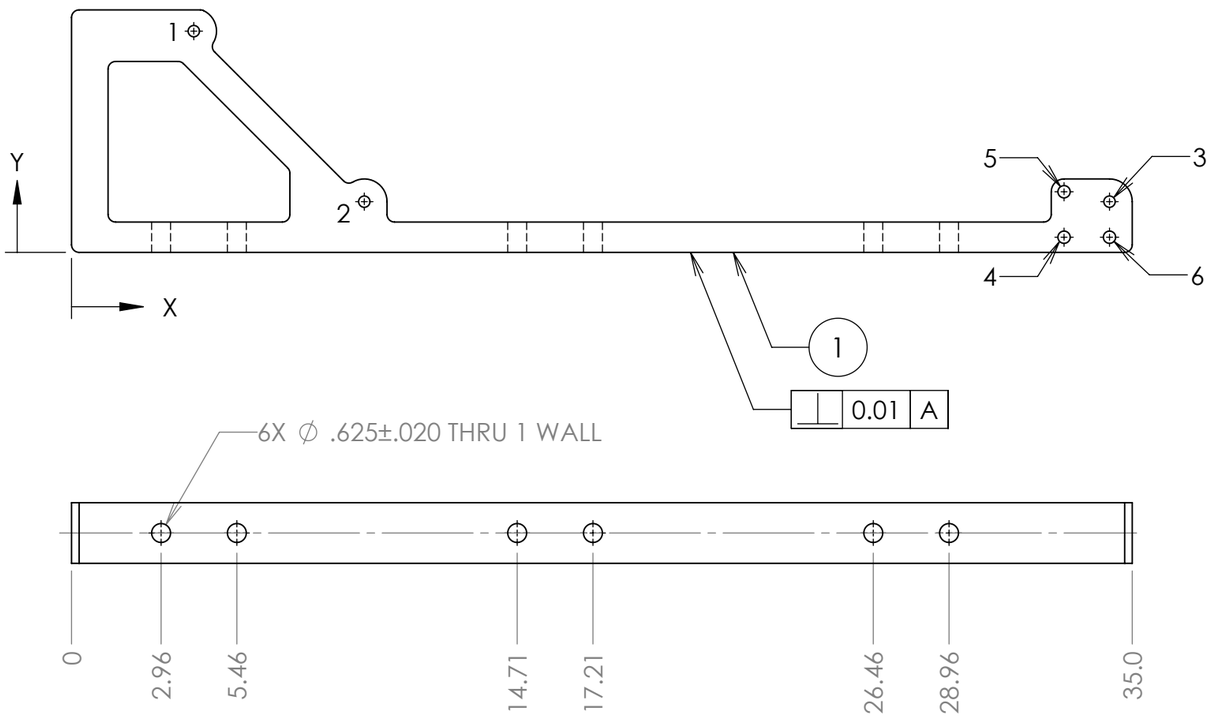

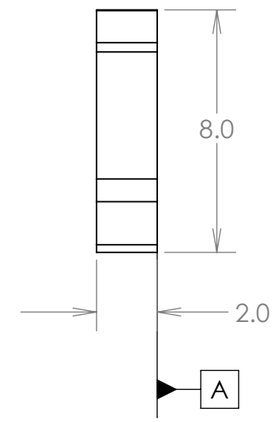

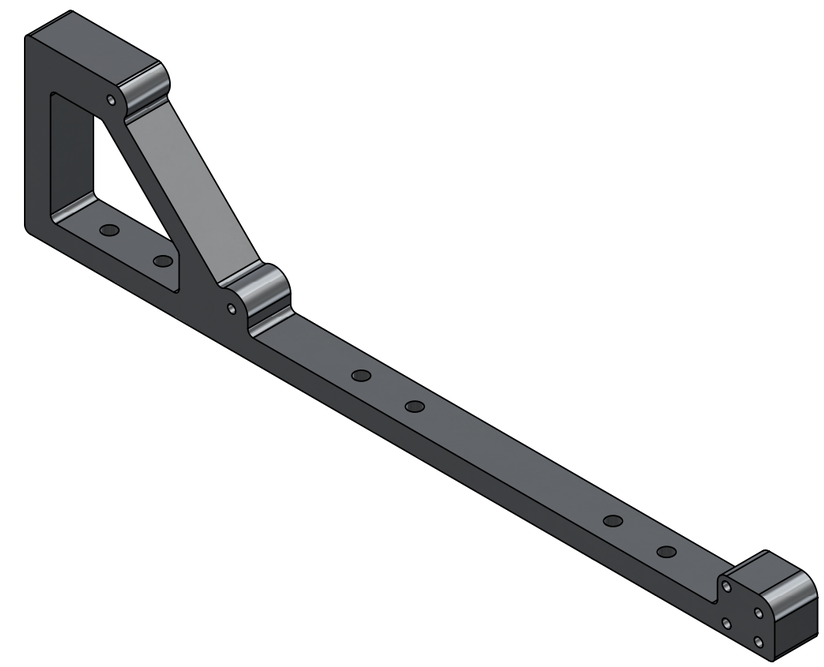

MATERIAL 6061

SURFACE TREATMENT

DIMENSIONS IN INCHES. UNLESS OTHERWISE SPECIFIED:

TOLERANCES		
	X.X ± 0.1	FRAC. ± 1/64
	X.XX ± 0.01	ANGLES ± 1.00°
	X.XXX ± 0.005	FINISH 3.2 (um)

ERNEST ORLANDO LAWRENCE BERKELEY NATIONAL LABORATORY
UNIVERSITY OF CALIFORNIA - BERKELEY

IDS Load Test Upright

DWG BY J.H. Silber	DATE 2011-09-05		
CHK BY J.H. Silber	DATE 2011-09-05		
APR BY J.H. Silber	DATE 2011-09-05		

THREADS ARE CLASS 2
CHAMFER ENDS OF ALL SCREW THREADS 30°
CUT ROUND, 1.5 THREAD RELIEF ON MACHINED THREADS
BREAK EDGES .016 MAX. ON MACHINED WORK
REMOVE BURRS, WELD SPLATTER & LOOSE SCALE
IN ACCORDANCE WITH ASME Y14.5M & B46.1

SER NO.		SCALE: 1:5	SHEET 1 OF 1	
PROJECT NO.	PROJECT NAME	CATEGORY CODE	DWG NO.	SIZE B / REV. 0