| REVISIONS | | | | |
|---|---|---|---|---|
| REV | DWG | CHK | DATE | DESCRIPTION |
| 0 | JHS | JHS | 2011-07-08 | Initial drawing |
| 1 | JHS | JHS | 2011-07-14 | Tighten position tolerance on alignment holes |
| 2 | JHS | JHS | 2011-08-02 | Additional large holes |

| Hole Table - Inner Flange | | | |
|---|---|---|---|
| TAG | X LOC | Y LOC | SIZE |
| A1 | -222.0000 | 0.0000 | ∅4.000 H7/g6 THRU |
| A2 | 222.0000 | -0.0000 | |
| B1 | -214.436 | -57.458 | ∅ 4.30 THRU |
| B2 | -214.436 | 57.458 | |
| B3 | -192.258 | -111.000 | |
| B4 | -192.258 | 111.000 | |
| B5 | -156.978 | -156.978 | |
| B6 | -156.978 | 156.978 | |
| B7 | -111.000 | -192.258 | |
| B8 | -111.000 | 192.258 | |
| B9 | -57.458 | -214.436 | |
| B10 | -57.458 | 214.436 | |
| B11 | -0.000 | -222.000 | |
| B12 | 0.000 | 222.000 | |
| B13 | 57.458 | -214.436 | |
| B14 | 57.458 | 214.436 | |
| B15 | 111.000 | -192.258 | |
| B16 | 111.000 | 192.258 | |
| B17 | 156.978 | -156.978 | |
| B18 | 156.978 | 156.978 | |
| B19 | 192.258 | -111.000 | |
| B20 | 192.258 | 111.000 | |
| B21 | 214.436 | -57.458 | |
| B22 | 214.436 | 57.458 | |

| Hole Table - Outer Flange | | | |
|---|---|---|---|
| TAG | X LOC | Y LOC | SIZE |
| C1 | -386.0000 | 0.0000 | ∅4.000 H7/g6 THRU |
| C2 | 386.0000 | -0.0000 | |
| D1 | -372.847 | -99.904 | ∅ 4.30 THRU |
| D2 | -372.847 | 99.904 | |
| D3 | -334.286 | -193.000 | |
| D4 | -334.286 | 193.000 | |
| D5 | -272.943 | -272.943 | |
| D6 | -272.943 | 272.943 | |
| D7 | -193.000 | -334.286 | |
| D8 | -188.574 | 326.619 | |
| D9 | -99.904 | -372.847 | |
| D10 | -94.728 | 353.529 | |
| D11 | -0.000 | -386.000 | |
| D12 | 0.000 | 380.692 | |
| D13 | 99.904 | -372.847 | |
| D14 | 99.904 | 372.847 | |
| D15 | 193.000 | -334.286 | |
| D16 | 193.000 | 334.286 | |
| D17 | 272.943 | -272.943 | |
| D18 | 272.943 | 272.943 | |
| D19 | 334.286 | -193.000 | |
| D20 | 334.286 | 193.000 | |
| D21 | 372.847 | -99.904 | |
| D22 | 372.847 | 99.904 | |

**Configuration: East**

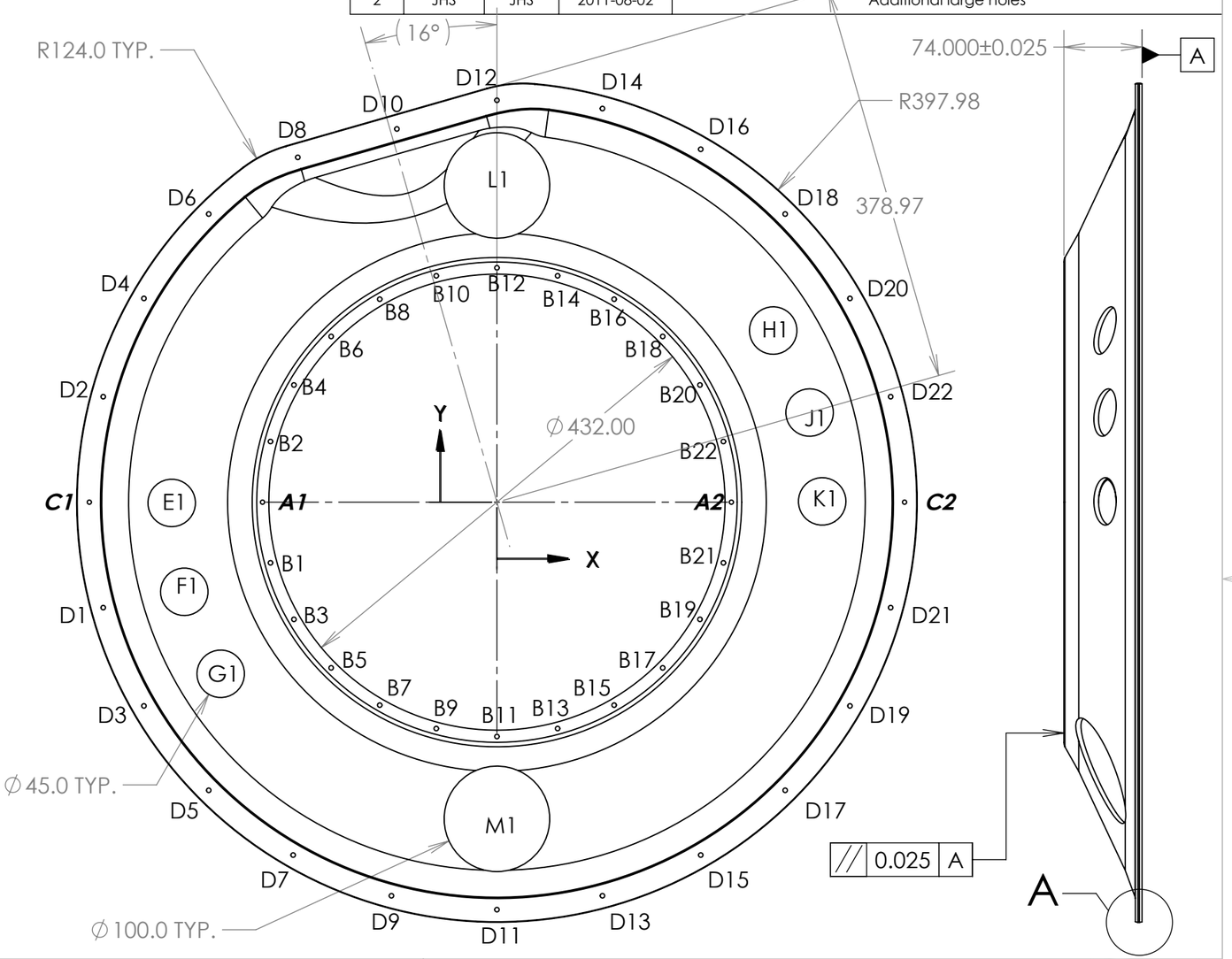


| Hole Table - Large Cutouts | | |
|---|---|---|
| TAG | X LOC | Y LOC |
| E1 | -307.999 | -0.738 |
| F1 | -296.069 | -84.896 |
| G1 | -261.589 | -162.589 |
| H1 | 261.589 | 162.589 |
| J1 | 296.069 | 84.896 |
| K1 | 307.999 | 0.738 |
| L1 | 0.000 | 300.000 |
| M1 | 0.000 | -300.000 |

NOTE:
The tags on the four precision holes have been shown in ***boldface*** to clearly indicate their positions. Tolerance on dimensions with 4-place decimal (X.XXXX) is ±0.025.

MATERIAL Carbon Fiber Part (provided)

SURFACE TREATMENT

DIMENSIONS IN MM. UNLESS OTHERWISE SPECIFIED:

| TOLERANCES | | |
|---|---|---|
| | X.X ± 0.5 | FRAC. ± 1/64 |
| | X.XX ± 0.1 | ANGLES ± 1.00° |
| | X.XXX ± 0.05 | FINISH 3.2 (um) |

ERNEST ORLANDO LAWRENCE BERKELEY NATIONAL LABORATORY
UNIVERSITY OF CALIFORNIA - BERKELEY

IDS Cone Shell

| | | |
|---|---|---|
| DWG BY Joe Silber | DATE 2011-07-08 | |
| CHK BY Joe Silber | DATE 2011-07-08 | |
| APR BY Joe Silber | DATE 2011-07-08 | |

THREADS ARE CLASS 2
CHAMFER ENDS OF ALL SCREW THREADS 30°
CUT ROUND, 1.5 THREAD RELIEF ON MACHINED THREADS
BREAK EDGES .016 MAX. ON MACHINED WORK
REMOVE BURRS, WELD SPLATTER & LOOSE SCALE
IN ACCORDANCE WITH ASME Y14.5M & B46.1

| SER NO. | | SCALE: 1:5 | SHEET 1 OF 5 | |
|---|---|---|---|---|
| PROJECT NO. | PROJECT NAME | CATEGORY CODE | DWG NO. | SIZE B / REV. 2 |

| REVISIONS | | | | |
|---|---|---|---|---|
| REV | DWG | CHK | DATE | DESCRIPTION |

| Hole Table - Inner Flange | | | |
|---|---|---|---|
| TAG | X LOC | Y LOC | SIZE |
| A1 | -151.404 | -162.361 | ∅ 4.30 THRU ALL |
| A2 | -162.361 | 151.404 | |
| A3 | -104.223 | -196.014 | |
| A4 | -117.642 | 188.267 | |
| A5 | -49.939 | -216.310 | |
| A6 | -64.907 | 212.300 | |
| A7 | 7.748 | -221.865 | |
| A8 | -7.748 | 221.865 | |
| A9 | 64.907 | -212.300 | |
| A10 | 49.939 | 216.310 | |
| A11 | 117.642 | -188.267 | |
| A12 | 104.223 | 196.014 | |
| A13 | 162.361 | -151.404 | |
| A14 | 151.404 | 162.361 | |
| A15 | 196.014 | -104.223 | |
| A16 | 216.310 | -49.939 | |
| A17 | 212.300 | 64.907 | |
| A18 | -221.865 | -7.748 | |
| A19 | 221.865 | 7.748 | |
| A20 | -212.300 | -64.907 | |
| A21 | -216.310 | 49.939 | |
| A22 | -196.014 | 104.223 | |
| B1 | -188.2667 | -117.6421 | ∅ 4.000 H7/g6 THRU |
| B2 | 188.2667 | 117.6421 | |

| Hole Table - Outer Flange | | | |
|---|---|---|---|
| TAG | X LOC | Y LOC | SIZE |
| C1 | -263.251 | -282.303 | ∅ 4.30 THRU ALL |
| C2 | -282.303 | 263.251 | |
| C3 | -181.216 | -340.818 | |
| C4 | -201.736 | 322.845 | |
| C5 | -86.831 | -376.107 | |
| C6 | -107.008 | 350.008 | |
| C7 | 13.471 | -385.765 | |
| C8 | -13.162 | 376.917 | |
| C9 | 112.855 | -369.134 | |
| C10 | 86.831 | 376.107 | |
| C11 | 204.549 | -327.347 | |
| C12 | 181.216 | 340.818 | |
| C13 | 282.303 | -263.251 | |
| C14 | 263.251 | 282.303 | |
| C15 | 340.818 | -181.216 | |
| C16 | 376.107 | -86.831 | |
| C17 | -385.765 | -13.471 | |
| C18 | -370.807 | -106.327 | |
| C19 | 370.807 | 106.327 | |
| C20 | 385.765 | 13.471 | |
| C21 | -376.107 | 86.831 | |
| C22 | -340.818 | 181.216 | |
| D1 | -327.3466 | -204.5488 | ∅ 4.000 H7/g6 THRU |
| D2 | 327.3466 | 204.5488 | |

| Hole Table - Large Cutouts | | |
|---|---|---|
| TAG | X LOC | Y LOC |
| E1 | -307.999 | -0.738 |
| F1 | -296.069 | -84.896 |
| G1 | -261.589 | -162.589 |
| H1 | 261.589 | 162.589 |
| J1 | 296.069 | 84.896 |
| K1 | 307.999 | 0.738 |
| L1 | -158.976 | 254.414 |
| M1 | 158.976 | -254.414 |

NOTE:
The tags on the four precision holes have been shown in ***boldface*** to clearly indicate their positions. Tolerance on dimensions with 4-place decimal (X.XXXX) is ±0.025.

**Configuration: West**

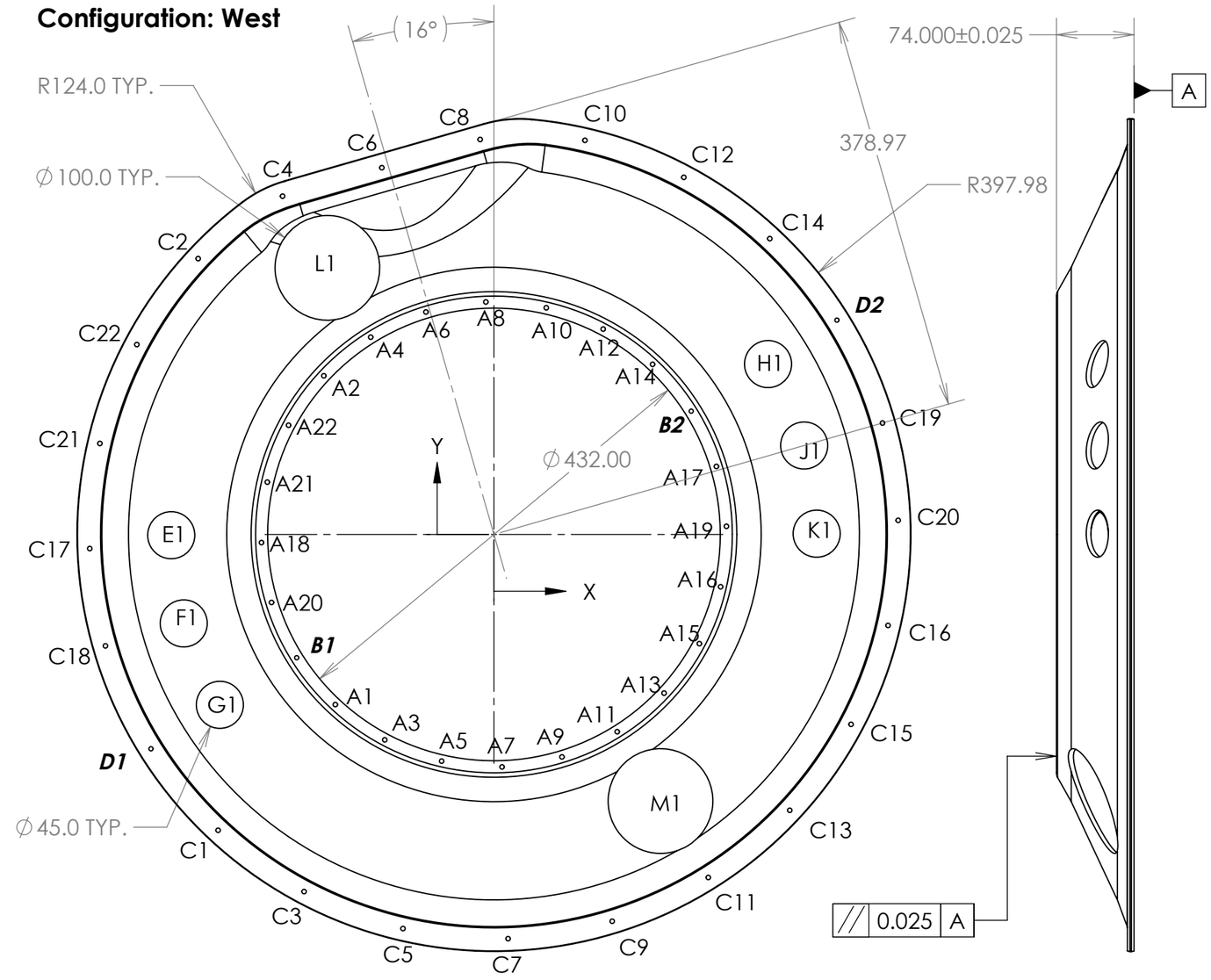


| | | | |
|---|---|---|---|
| MATERIAL | Carbon Fiber Part (provided) | | |
| SURFACE TREATMENT | | | |
| DIMENSIONS IN MM. UNLESS OTHERWISE SPECIFIED: | | | |
| TOLERANCES | X.X ± 0.5 | FRAC. ± 1/64 | |
| | X.XX ± 0.1 | ANGLES ± 1.00° | |
| | X.XXX ± 0.05 | FINISH 3.2 (um) | |

| | |
|---|---|
| DWG BY | DATE |
| CHK BY | DATE |
| APR BY | DATE |

THREADS ARE CLASS 2
CHAMFER ENDS OF ALL SCREW THREADS 30°
CUT ROUND, 1.5 THREAD RELIEF ON MACHINED THREADS
BREAK EDGES .016 MAX. ON MACHINED WORK
REMOVE BURRS, WELD SPLATTER & LOOSE SCALE
IN ACCORDANCE WITH ASME Y14.5M & B46.1

ERNEST ORLANDO LAWRENCE BERKELEY NATIONAL LABORATORY
UNIVERSITY OF CALIFORNIA - BERKELEY

IDS Cone Shell

| | | | | | |
|---|---|---|---|---|---|
| SER NO. | | SCALE: 1:5 | SHEET 2 OF 5 | | |
| PROJECT NO. | PROJECT NAME | CATEGORY CODE | DWG NO. | SIZE | REV. |
| | | | | B | 2 |

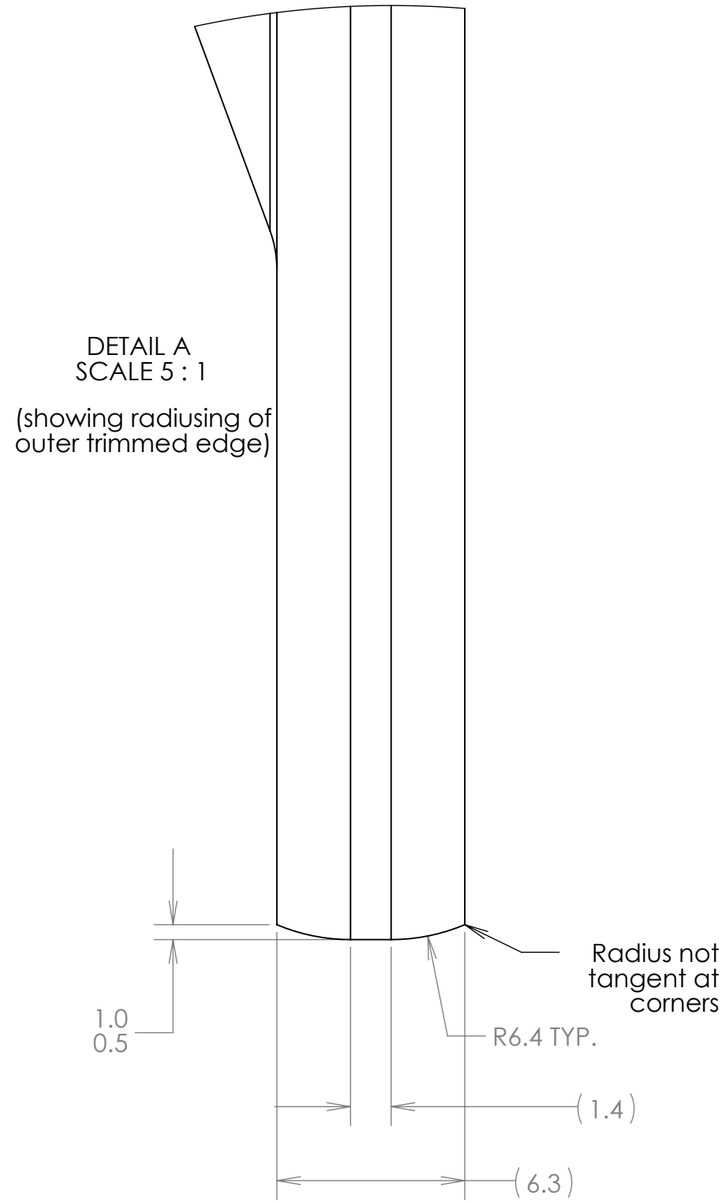


MATERIAL

SURFACE TREATMENT

DIMENSIONS IN MM. UNLESS OTHERWISE SPECIFIED:

| TOLERANCES | | |
|---|---|---|
| | X.X ± 0.5 | FRAC. ± 1/64 |
| | X.XX ± 0.1 | ANGLES ± 1.00° |
| | X.XXX ± 0.05 | FINISH 3.2 (um) |

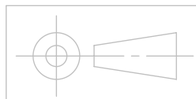

| | |
|---|---|
| DWG BY | DATE |
| CHK BY | DATE |
| APR BY | DATE |

THREADS ARE CLASS 2
CHAMFER ENDS OF ALL SCREW THREADS 30°
CUT ROUND, 1.5 THREAD RELIEF ON MACHINED THREADS
BREAK EDGES .016 MAX. ON MACHINED WORK
REMOVE BURRS, WELD SPLATTER & LOOSE SCALE
IN ACCORDANCE WITH ASME Y14.5M & B46.1

ERNEST ORLANDO LAWRENCE BERKELEY NATIONAL LABORATORY
UNIVERSITY OF CALIFORNIA - BERKELEY

# IDS Cone Shell

| | | | | |
|---|---|---|---|---|
| SER NO. | | SCALE: 1:5 | SHEET 3 OF 5 | |
| PROJECT NO. | PROJECT NAME | CATEGORY CODE | DWG NO. | SIZE B / REV. 2 |

**Configuration: Untrimmed**
This view shows approximate size of the cone as-cured -- before trimming, milling, drilling operations.

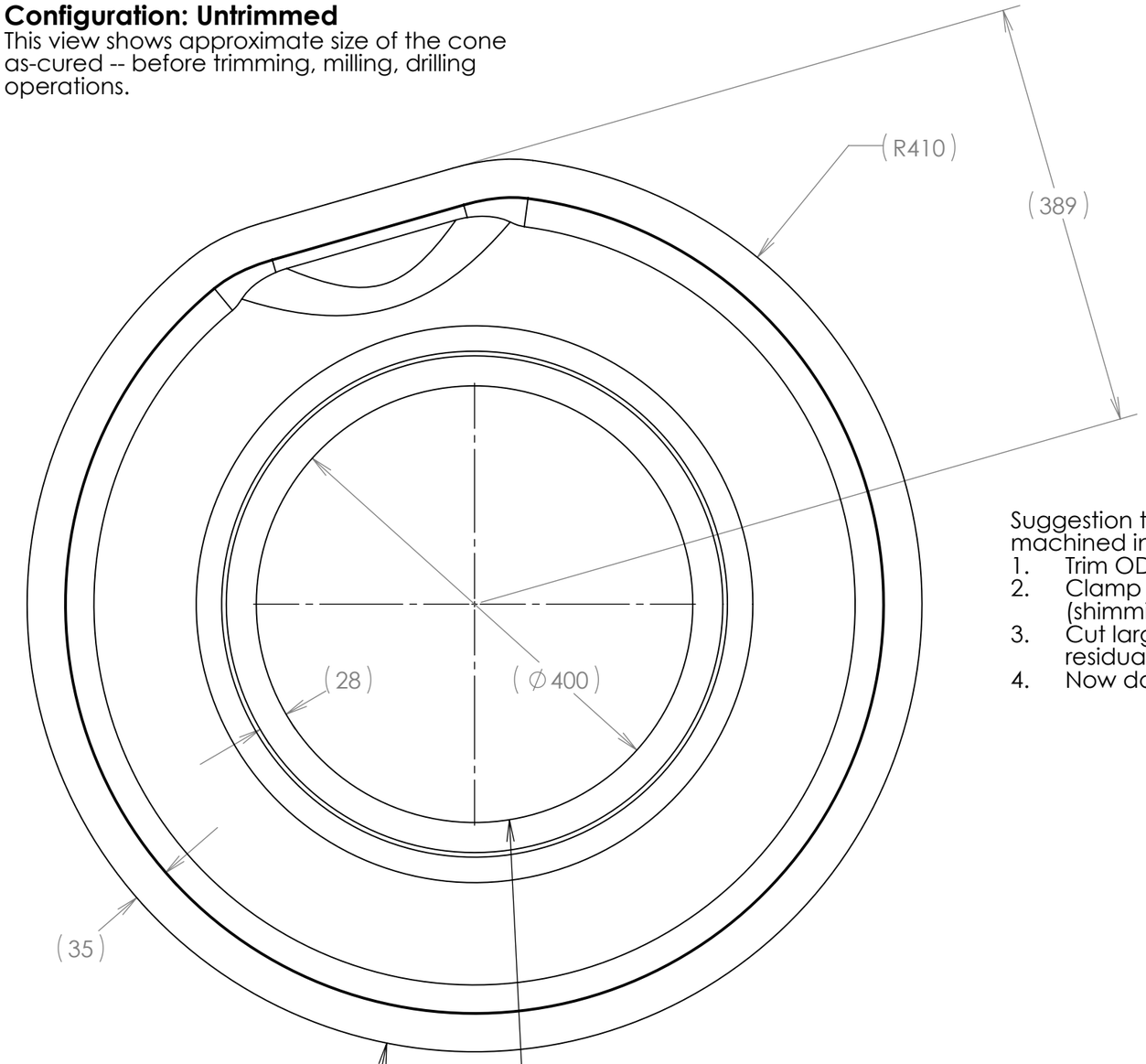


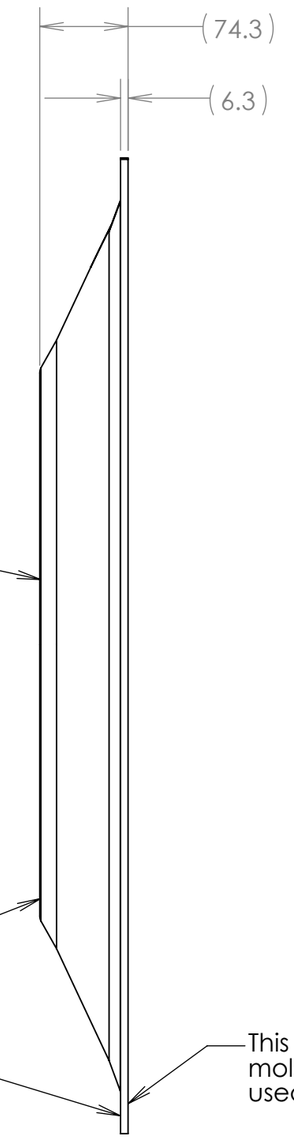


Suggestion to minimize loss of flatness on this machined inner flange face:
1. Trim OD (to reduce clamping deflection).
2. Clamp down on this reduced OD edge (shimming as necessary).
3. Cut large cut-out holes (to reduce residual stress springback).
4. Now do facing operation on inner flange.

This is the rougher "bag-side" surface. It is to be milled down to achieve the precision 74mm height.

Do not need to mill this surface.

This is the smooth and flat mold surface. It is to be used as reference surface.

Mill outer profile to indicated size.
Mill approx 1/4" corner radii on edge, as shown in detail on adjoining sheet.

Mill inner profile (circular) to indicated size.
No need to radius the edge.

| | | |
|---|---|---|
| MATERIAL | | |
| SURFACE TREATMENT | | |
| DIMENSIONS IN MM. UNLESS OTHERWISE SPECIFIED: | | |
| TOLERANCES | X.X ± 0.5 | FRAC. ± 1/64 |
| | X.XX ± 0.1 | ANGLES ± 1.00° |
| | X.XXX ± 0.05 | FINISH 3.2 (um) |

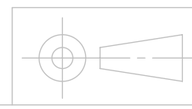

**ERNEST ORLANDO LAWRENCE BERKELEY NATIONAL LABORATORY**
UNIVERSITY OF CALIFORNIA - BERKELEY

# IDS Cone Shell

| | |
|---|---|
| DWG BY | DATE |
| CHK BY | DATE |
| APR BY | DATE |

THREADS ARE CLASS 2
CHAMFER ENDS OF ALL SCREW THREADS 30°
CUT ROUND, 1.5 THREAD RELIEF ON MACHINED THREADS
BREAK EDGES .016 MAX. ON MACHINED WORK
REMOVE BURRS, WELD SPLATTER & LOOSE SCALE
IN ACCORDANCE WITH ASME Y14.5M & B46.1

| | | | | | |
|---|---|---|---|---|---|
| SER NO. | | SCALE: 1:5 | SHEET 4 OF 5 | | |
| PROJECT NO. | PROJECT NAME | CATEGORY CODE | DWG NO. | SIZE | REV. |
| | | | | B | 2 |

## Configuration: Untrimmed

## Configuration: East

## Configuration: West

The difference between configurations "East" and "West" is just in hole locations.

| | | | |
|---|---|---|---|
| MATERIAL | | | |
| SURFACE TREATMENT | | | |
| DIMENSIONS IN MM. UNLESS OTHERWISE SPECIFIED: | | | |
| TOLERANCES | X.X ± 0.5 | FRAC. ± 1/64 | |
| | X.XX ± 0.1 | ANGLES ± 1.00° | |
| | X.XXX ± 0.05 | FINISH 3.2 (um) | |

ERNEST ORLANDO LAWRENCE BERKELEY NATIONAL LABORATORY
UNIVERSITY OF CALIFORNIA - BERKELEY

IDS Cone Shell

| | |
|---|---|
| DWG BY | DATE |
| CHK BY | DATE |
| APR BY | DATE |

THREADS ARE CLASS 2
CHAMFER ENDS OF ALL SCREW THREADS 30°
CUT ROUND, 1.5 THREAD RELIEF ON MACHINED THREADS
BREAK EDGES .016 MAX. ON MACHINED WORK
REMOVE BURRS, WELD SPLATTER & LOOSE SCALE
IN ACCORDANCE WITH ASME Y14.5M & B46.1

| | | | | | |
|---|---|---|---|---|---|
| SER NO. | | SCALE: 1:5 | SHEET 5 OF 5 | | |
| PROJECT NO. | PROJECT NAME | CATEGORY CODE | DWG NO. | SIZE B | REV. 2 |