REVISIONS				
REV	DWG	CHK	DATE	DESCRIPTION
0	JHS	JHS	2011-04-27	Original drawing
1	JHS	JHS	2011-05-03	Slight contraction of large flange radius, thicken x-section, radii tols

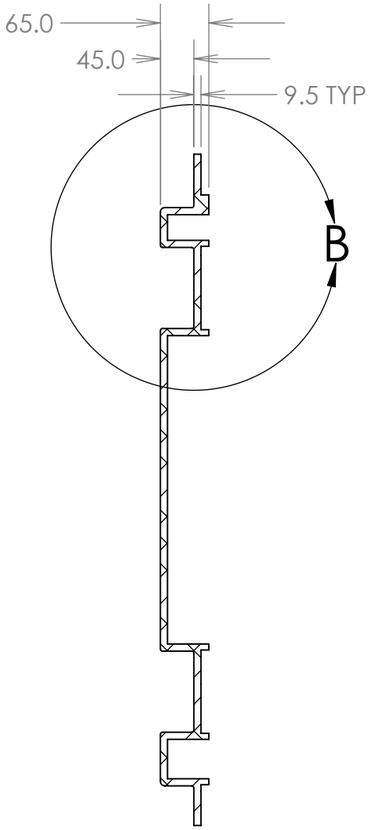

SECTION A-A

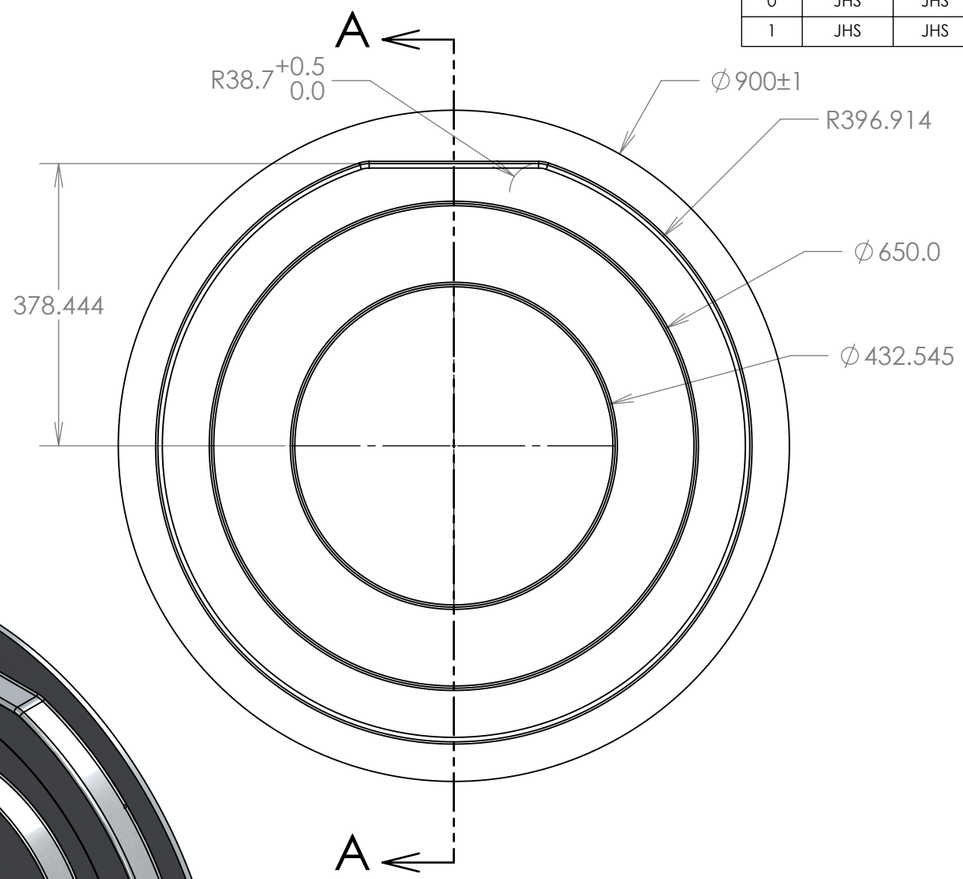

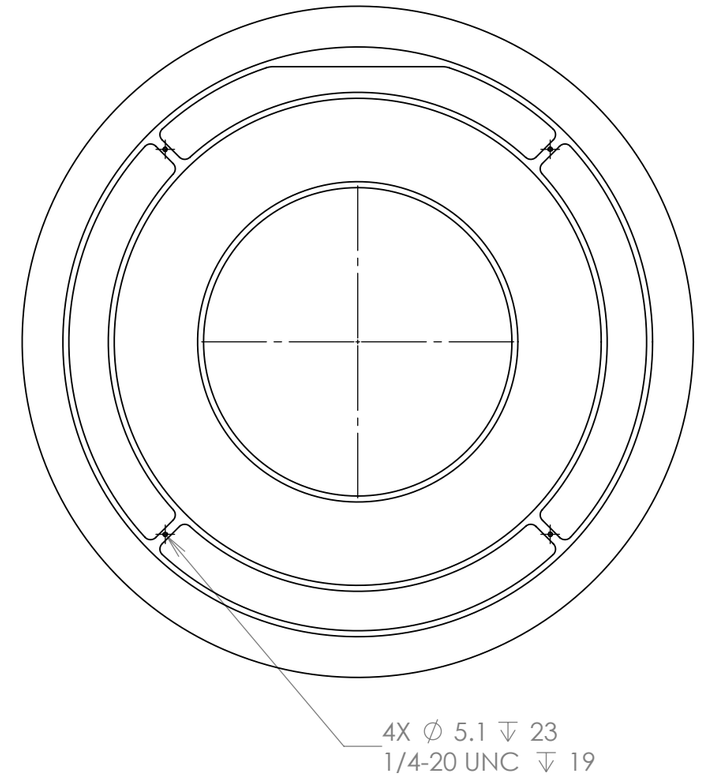

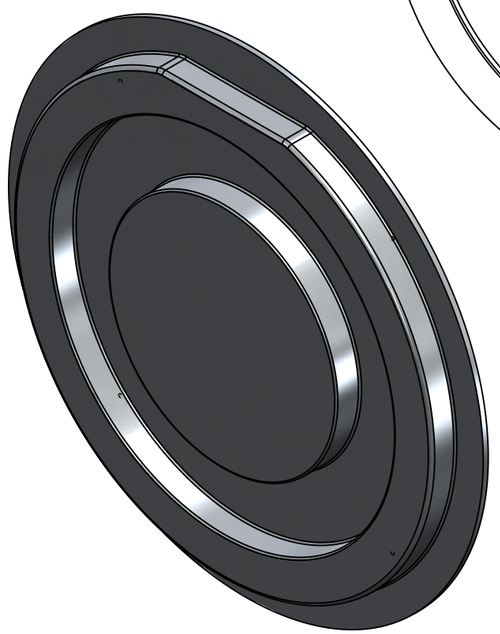

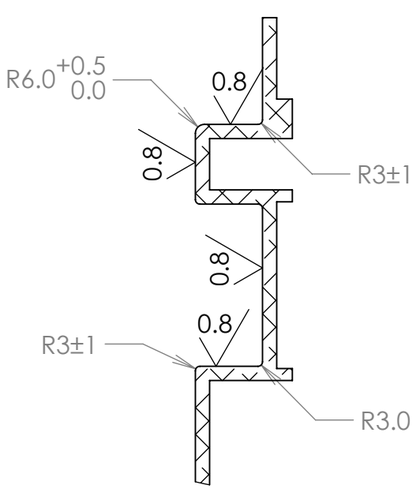

DETAIL B
SCALE 1 : 4

This drawing indicates overall size, key dimensions, surfaces, and tolerances.
Dimensions not specified here are to match solid model profile within ±0.5.
Unspecified corner radii to be at machinist's judgment, nominally 6.35mm, but no greater than 8mm.

MATERIAL 6061-T6

SURFACE TREATMENT

DIMENSIONS IN MM. UNLESS OTHERWISE SPECIFIED:

TOLERANCES		
	X.X ± 0.5	FRAC. ± 1/64
	X.XX ± 0.1	ANGLES ± 1.00°
	X.XXX ± 0.075	FINISH 3.2 (um)

ERNEST ORLANDO LAWRENCE BERKELEY NATIONAL LABORATORY
UNIVERSITY OF CALIFORNIA - BERKELEY

IDS Flanges Mold

DWG BY J.H. Silber	DATE 2011-04-27	
CHK BY J.H. Silber	DATE 2011-04-27	
APR BY J.H. Silber	DATE 2011-04-27	

THREADS ARE CLASS 2
CHAMFER ENDS OF ALL SCREW THREADS 30°
CUT ROUND, 1.5 THREAD RELIEF ON MACHINED THREADS
BREAK EDGES .016 MAX. ON MACHINED WORK
REMOVE BURRS, WELD SPLATTER & LOOSE SCALE
IN ACCORDANCE WITH ASME Y14.5M & B46.1

SER NO.		SCALE: 1:8	SHEET 1 OF 1	
PROJECT NO.	PROJECT NAME	CATEGORY CODE	DWG NO.	SIZE B / REV. 1