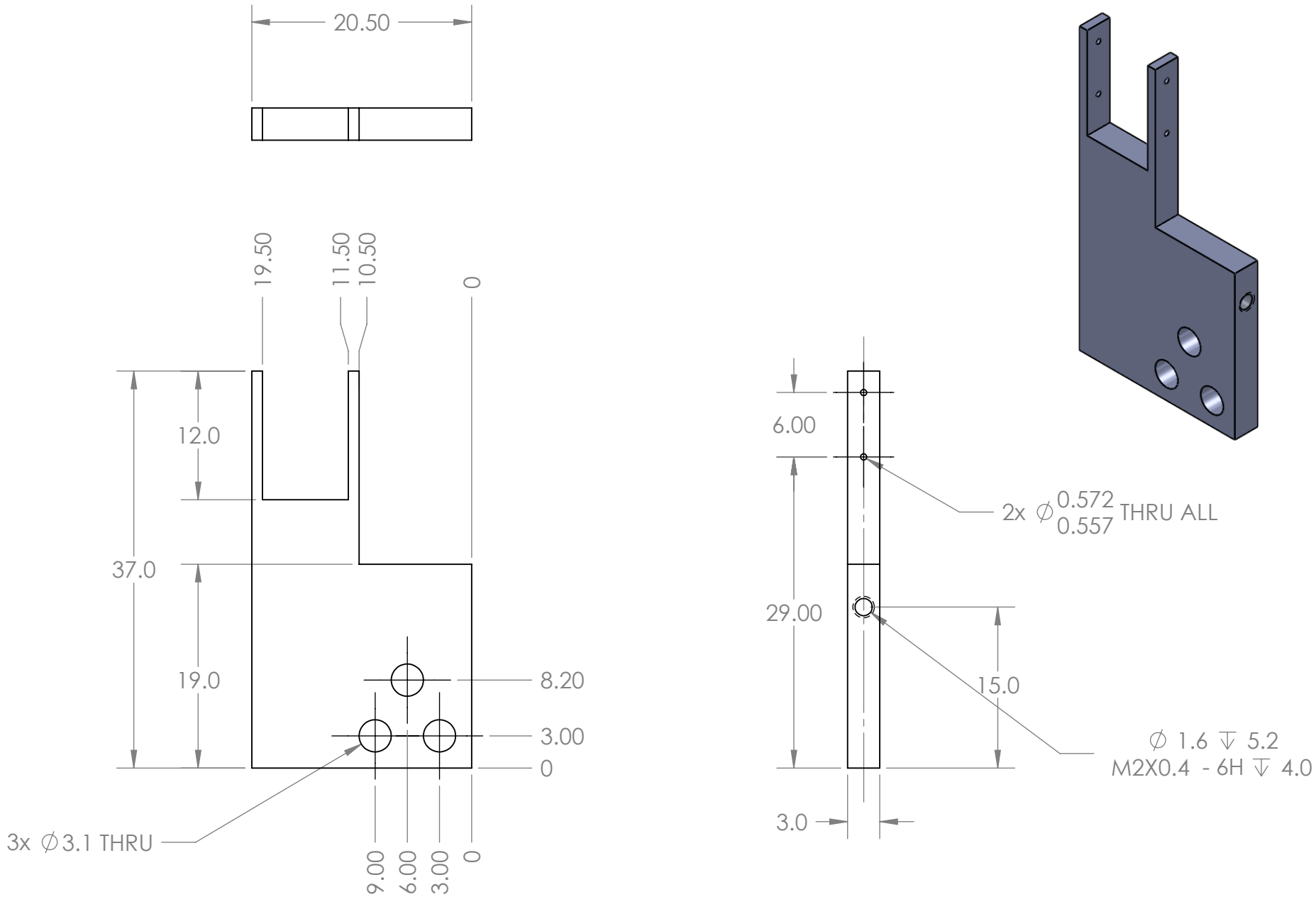

Unless otherwise indicated, approx 6.3 to 12.5 is fine.

MATERIAL 6061-T6	DIMENSIONS ARE IN MM UNLESS OTHERWISE SPECIFIED: 1 PLACE DECIMAL ±.1 2 PLACE DECIMAL ±.05 ANGULAR ±3°	SIZE A	TITLE: Rail Mount	REV 0
FINISH AS INDICATED		SCALE: 2:1	Lawrence Berkeley National Laboratory	SHEET 1 OF 1