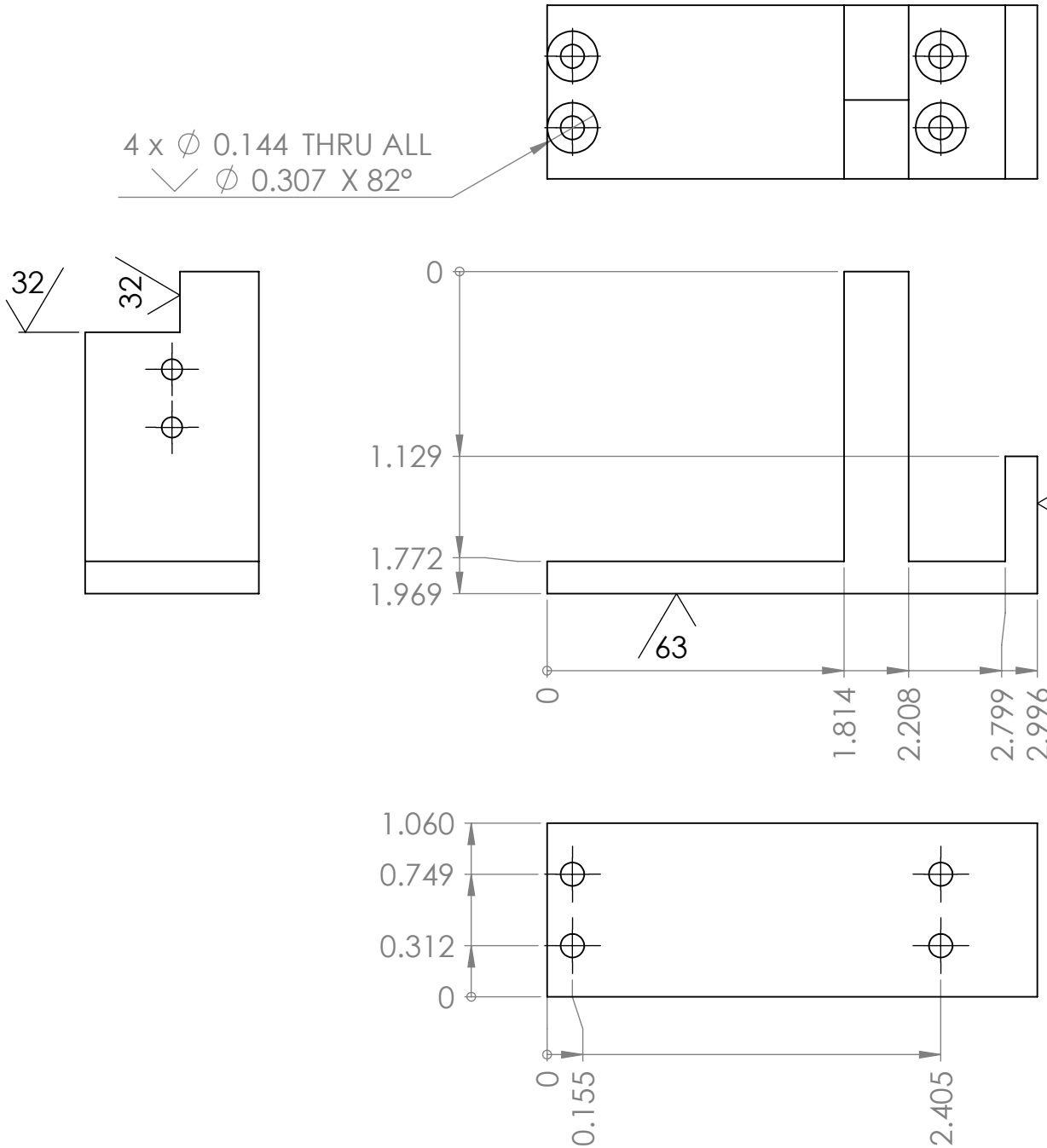

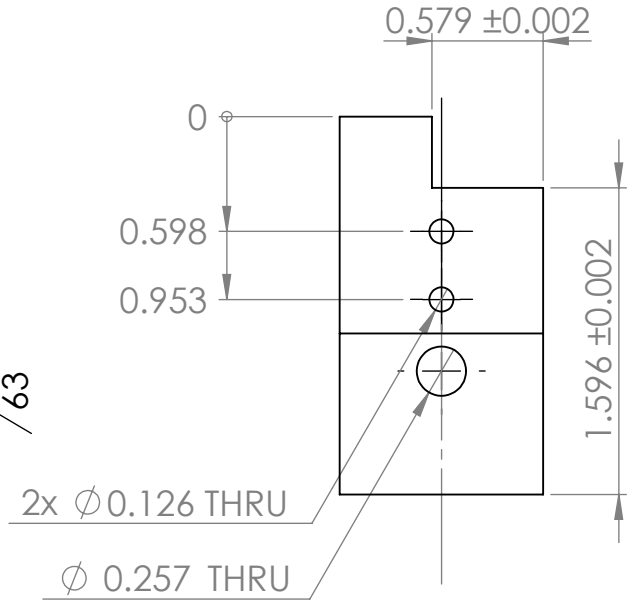

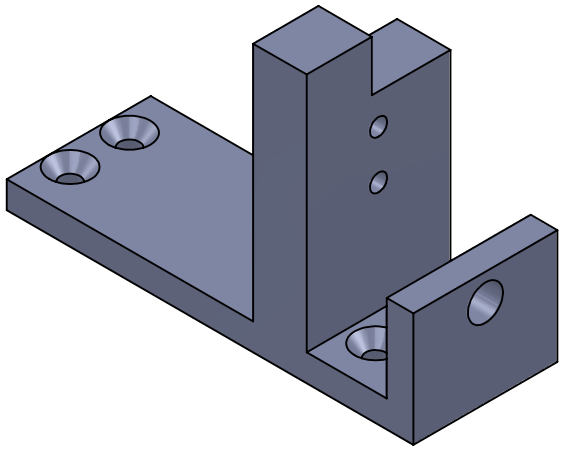

Waterjet surface finish ok on profile, except where otherwise indicated.

MATERIAL 6061-T6	DIMENSIONS ARE IN INCHES UNLESS OTHERWISE SPECIFIED: 1 PLACE DECIMAL ±.1 2 PLACE DECIMAL ±.03 3 PLACE DECIMAL ±.005 ANGULAR ±3°	SIZE A	TITLE: Constraint Mount	REV 0
FINISH AS INDICATED		SCALE: 1:1	Lawrence Berkeley National Laboratory	SHEET 1 OF 1