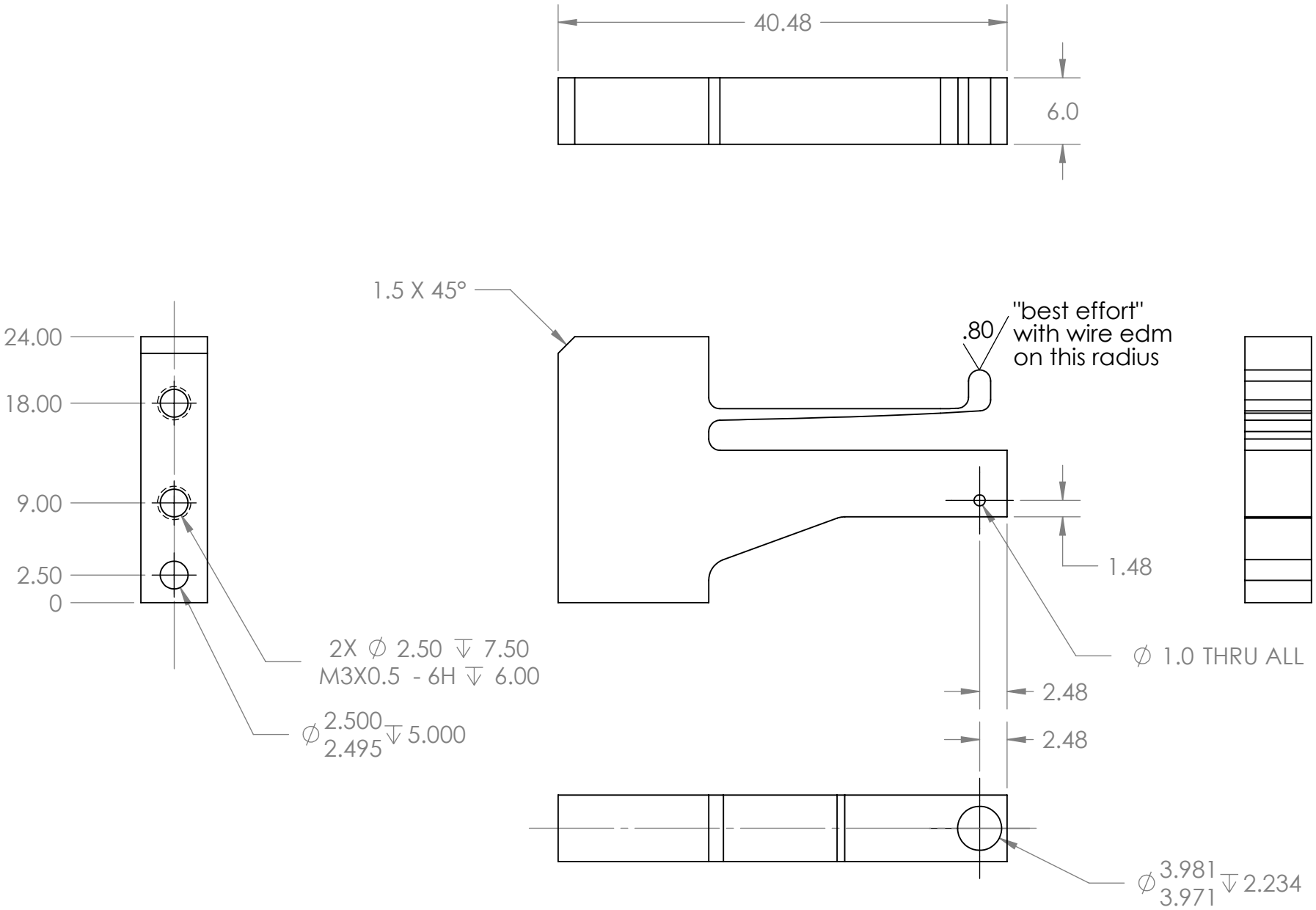

Approximately 3.2 or better on any surfaces not specifically indicated.

MATERIAL Ti 6Al-4V	DIMENSIONS ARE IN MM UNLESS OTHERWISE SPECIFIED: 1 PLACE DECIMAL ±.1 2 PLACE DECIMAL ±.05 ANGULAR ±3°	SIZE A	TITLE: Kin Hang Top Test Prototype 1	REV 1
FINISH AS INDICATED		SCALE: 2:1	Lawrence Berkeley National Laboratory	SHEET 1 OF 2

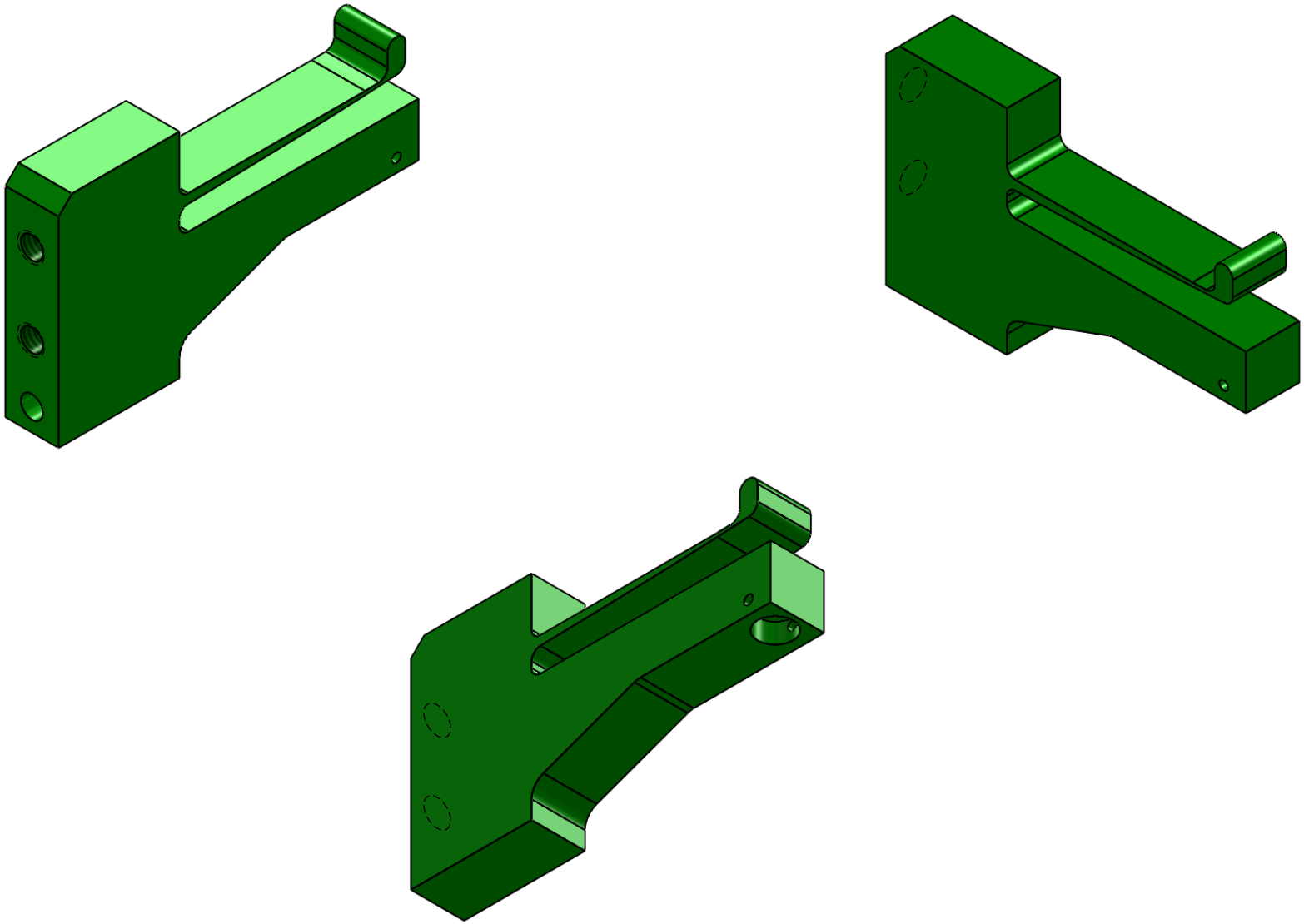

MATERIAL Ti 6Al-4V	DIMENSIONS ARE IN INCHES UNLESS OTHERWISE SPECIFIED: 1 PLACE DECIMAL ±.1 2 PLACE DECIMAL ±.03 3 PLACE DECIMAL ±.005 ANGULAR ±3°	SIZE **A**	TITLE: Kin Hang Top Test Prototype 1	REV 1
FINISH AS INDICATED		SCALE: 2:1	Lawrence Berkeley National Laboratory	SHEET 2 OF 2