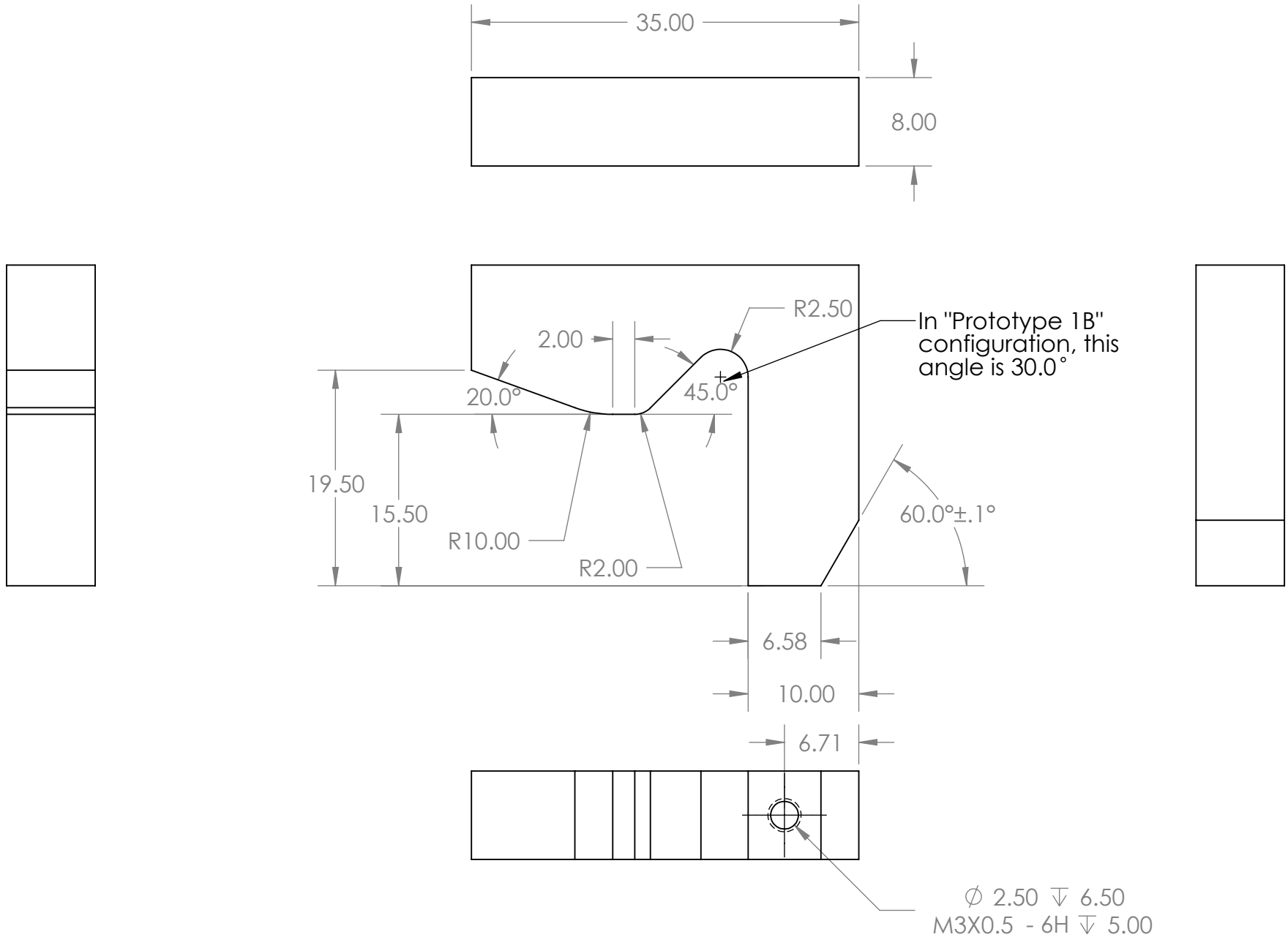

MATERIAL	DIMENSIONS ARE IN MM	SIZE	TITLE:	REV
Ti 6Al-4V / 7075-T6	UNLESS OTHERWISE SPECIFIED: 1 PLACE DECIMAL ±.1 2 PLACE DECIMAL ±.05 ANGULAR ±3°	A	Top Constraint Prototype 1A, 1B	0
FINISH		SCALE: 2:1	Lawrence Berkeley National Laboratory	SHEET 1 OF 2
AS INDICATED				

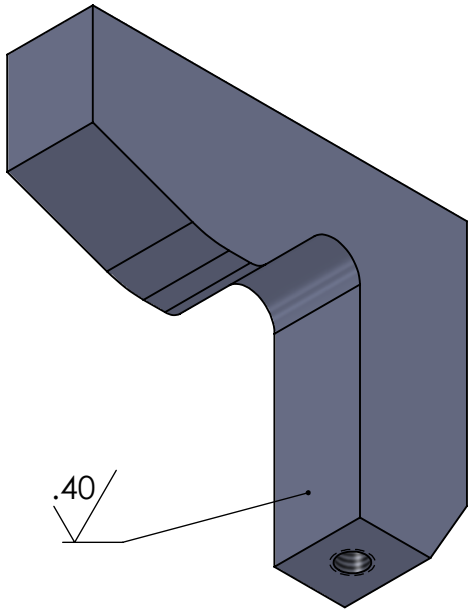

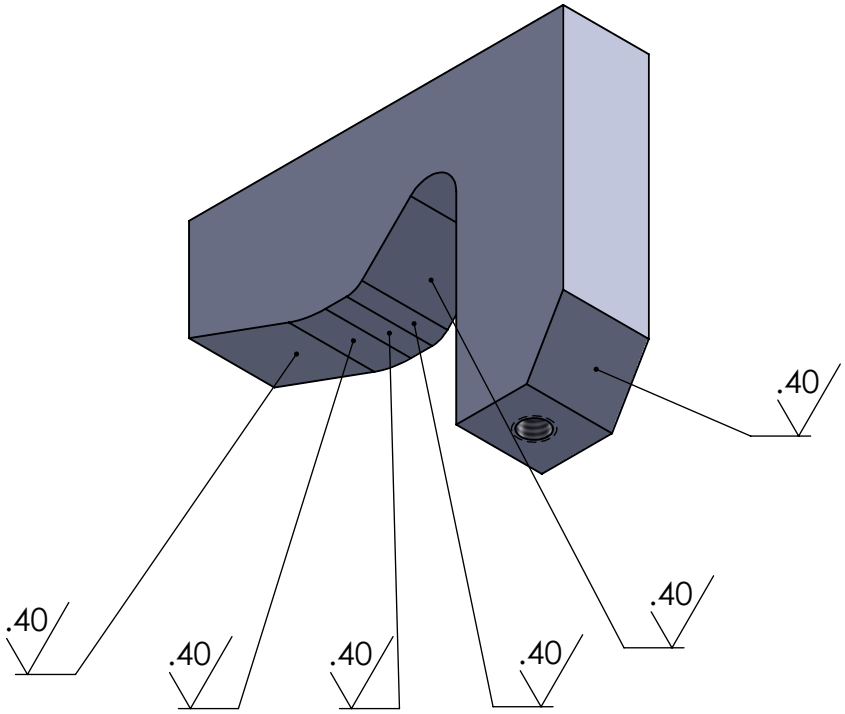

MATERIAL	DIMENSIONS ARE IN INCHES	SIZE	TITLE:	REV
Ti 6Al-4V / 7075-T6	UNLESS OTHERWISE SPECIFIED: 1 PLACE DECIMAL ±.1 2 PLACE DECIMAL ±.03 3 PLACE DECIMAL ±.005 ANGULAR ±3°	A	Top Constraint Prototype 1A, 1B	0
FINISH				
AS INDICATED		SCALE: 2:1	Lawrence Berkeley National Laboratory	SHEET 2 OF 2