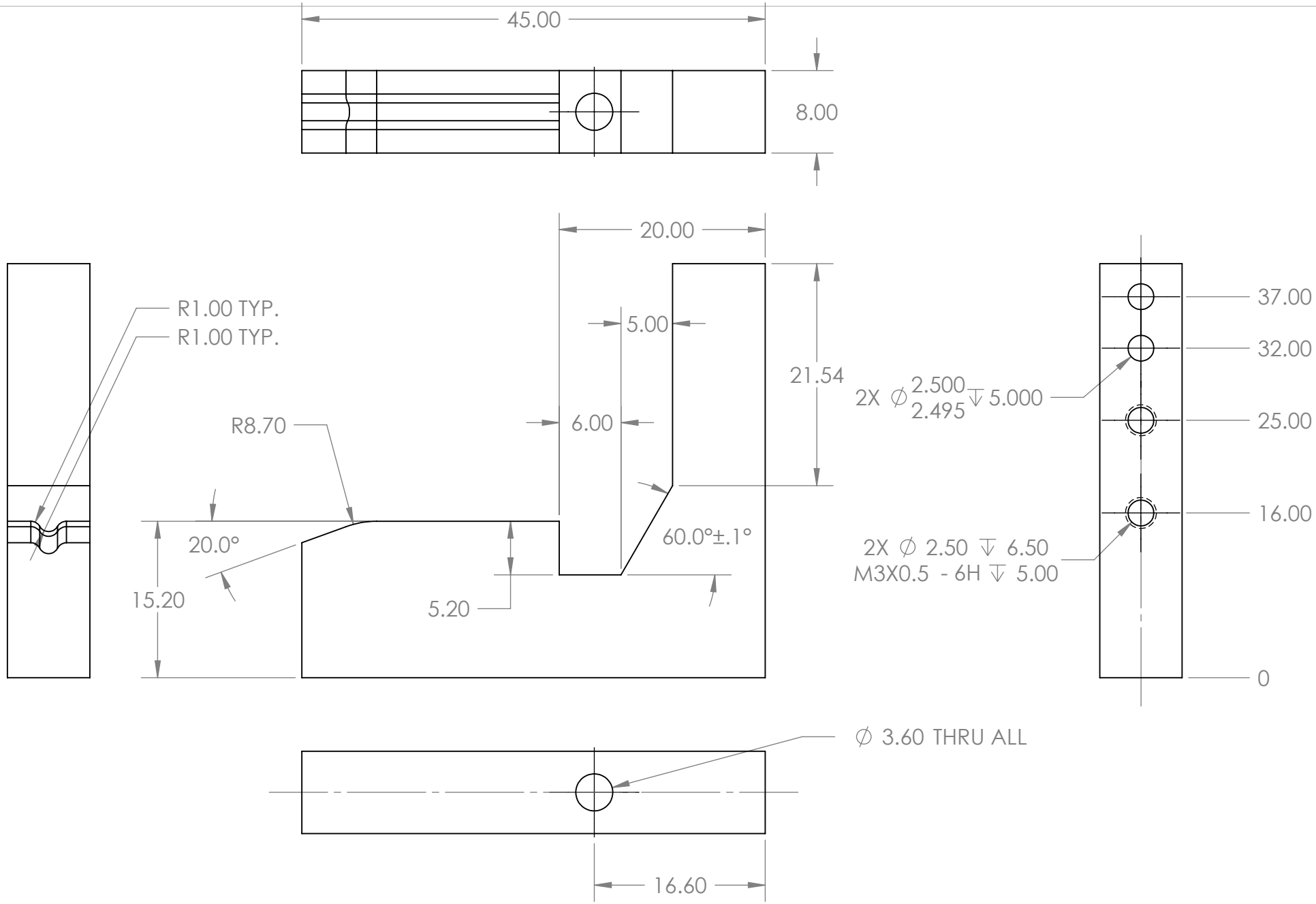

MATERIAL	DIMENSIONS ARE IN MM	SIZE	TITLE:	REV
Ti 6Al-4V / 7075-T6	UNLESS OTHERWISE SPECIFIED: 1 PLACE DECIMAL ±.1 2 PLACE DECIMAL ±.05 ANGULAR ±3°	A	Bottom Constraint Prototype 1	0
FINISH: AS INDICATED		SCALE: 2:1	Lawrence Berkeley National Laboratory	SHEET 1 OF 2

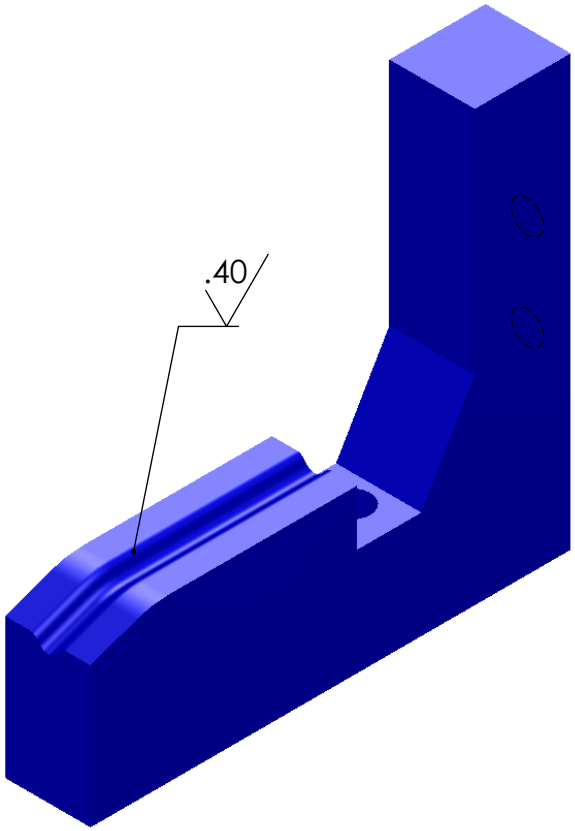

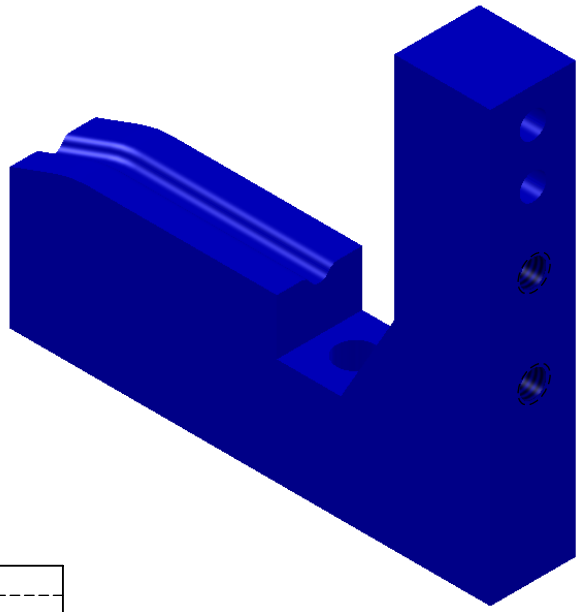

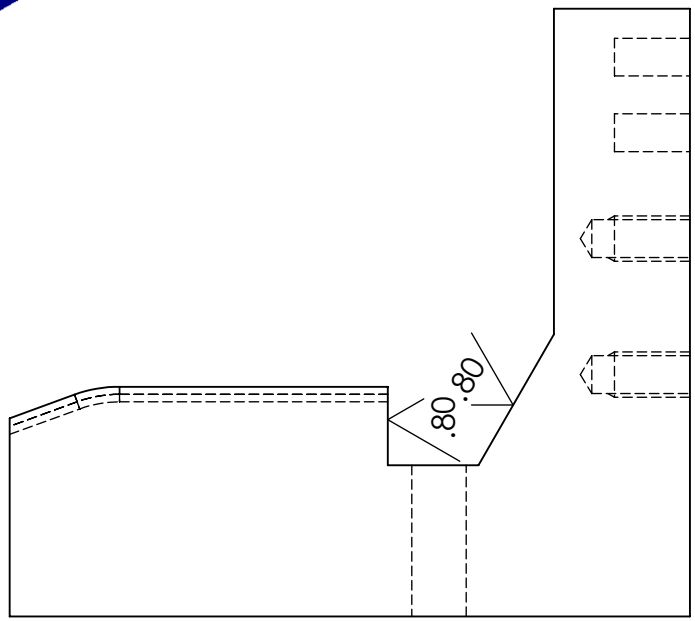

Where surface finish is not specifically indicated, it is not critical.

MATERIAL Ti 6Al-4V / 7075-T6	DIMENSIONS ARE IN INCHES UNLESS OTHERWISE SPECIFIED: 1 PLACE DECIMAL ±.1 2 PLACE DECIMAL ±.03 3 PLACE DECIMAL ±.005 ANGULAR ±3°	SIZE A	TITLE: Bottom Constraint Prototype 1	REV 0
FINISH AS INDICATED		SCALE: 2:1	Lawrence Berkeley National Laboratory	SHEET 2 OF 2