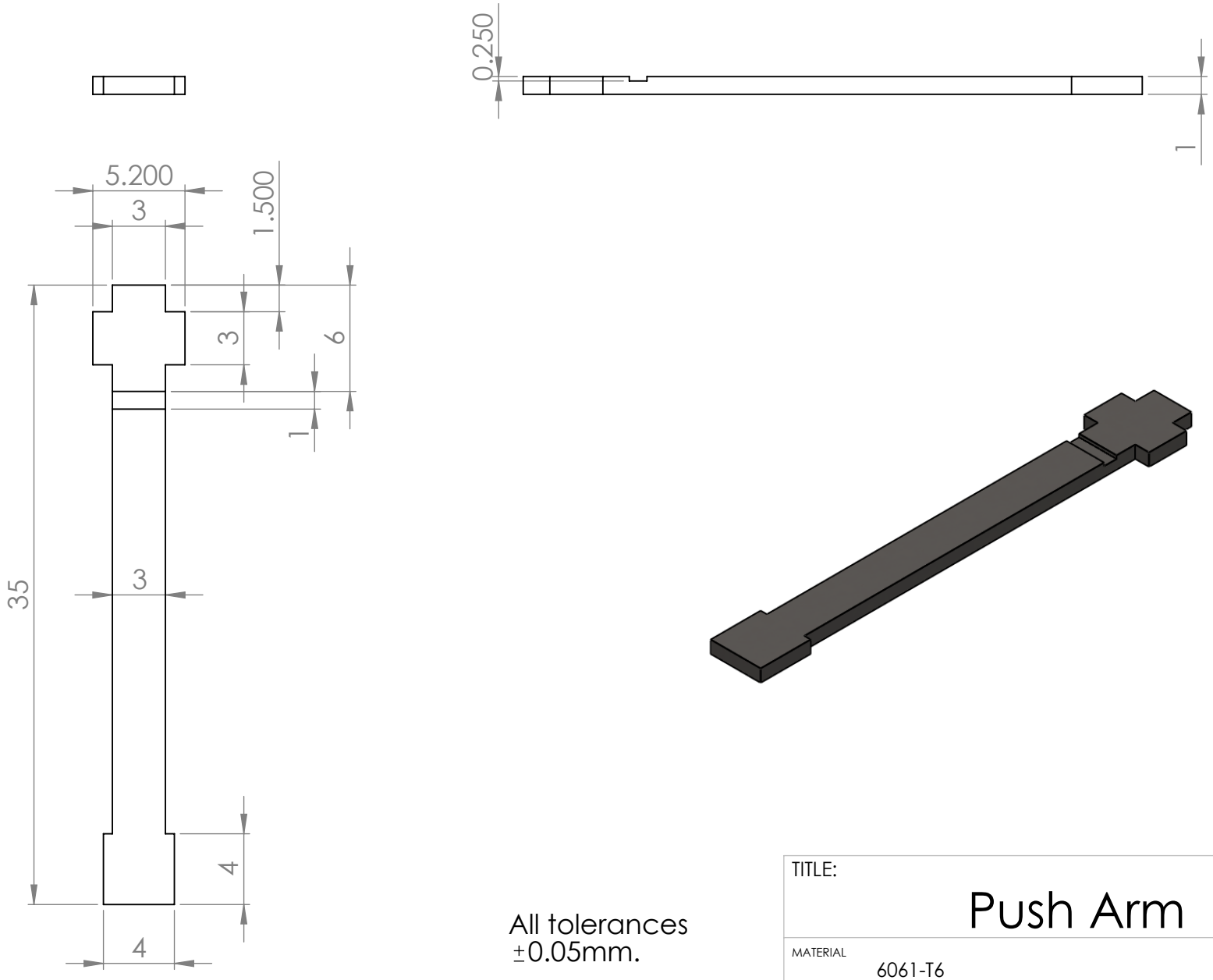

All tolerances
±0.05mm.

TITLE:	Push Arm		
MATERIAL	6061-T6		
DATE	2010-09-22	SCALE: 3:1	SHEET 1 OF 1