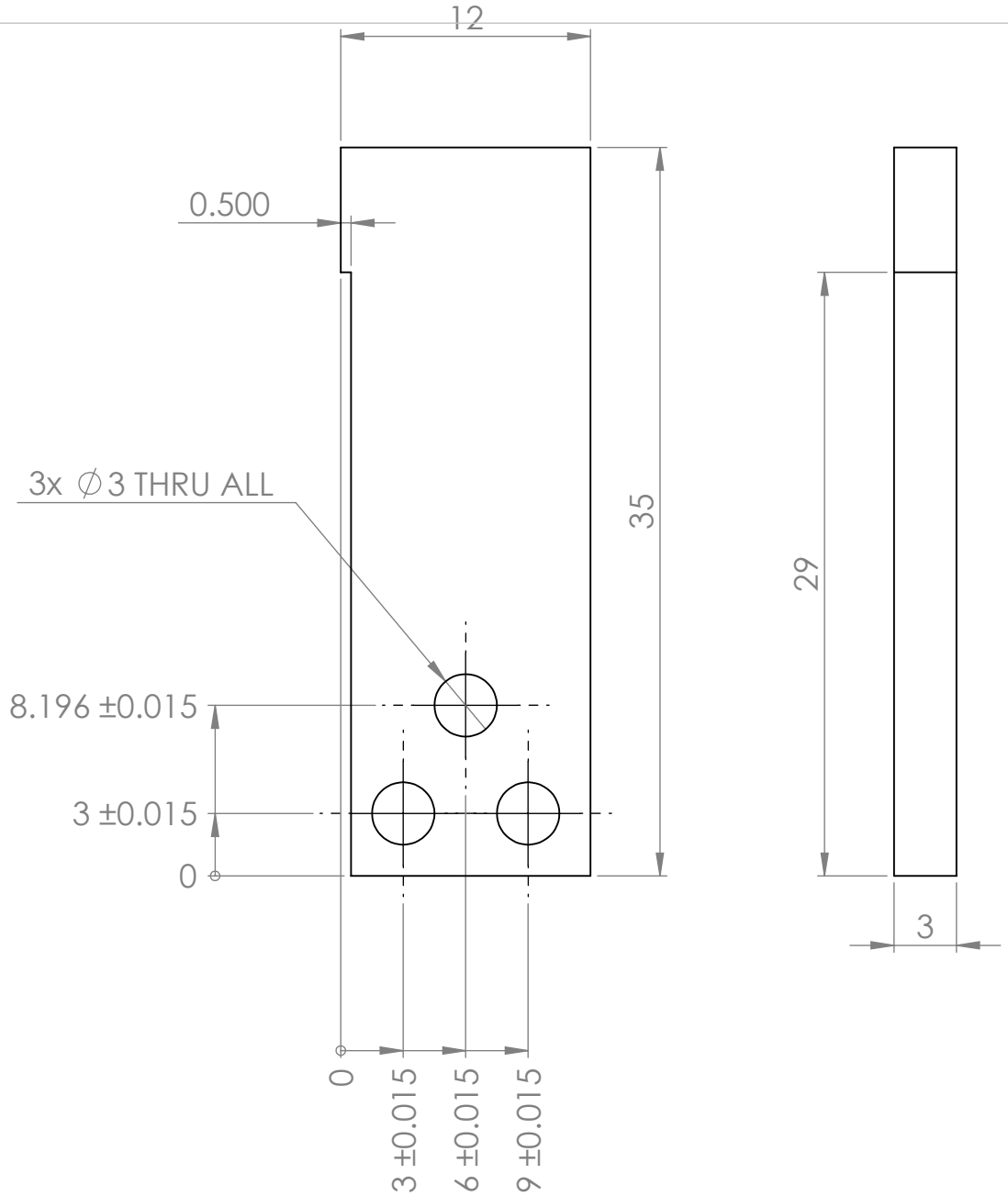

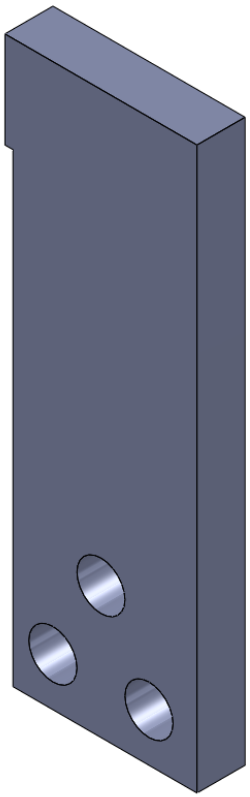

All tolerances ±0.05mm except where otherwise noted.

TITLE:	Flexure Mount		
MATERIAL	6061-T6		
DATE	2010-09-22	SCALE: 3:1	SHEET 1 OF 1