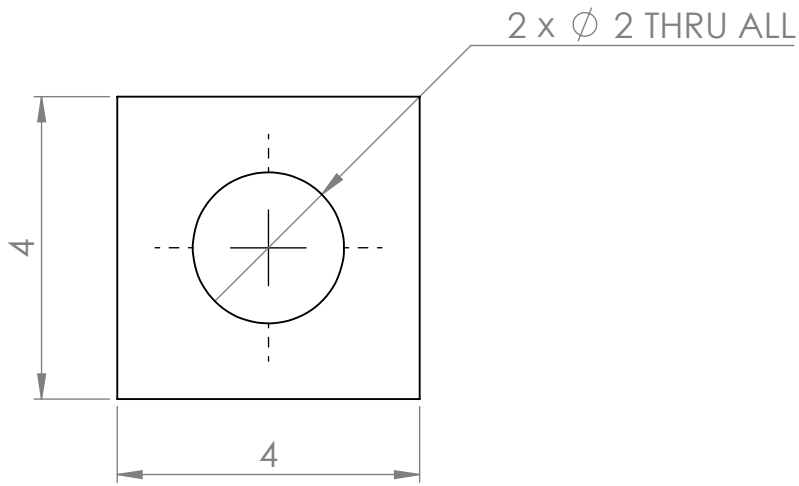

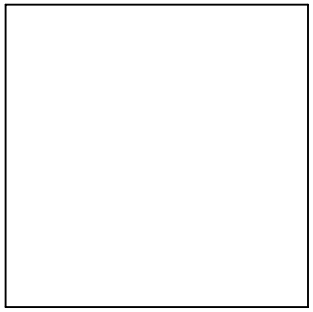

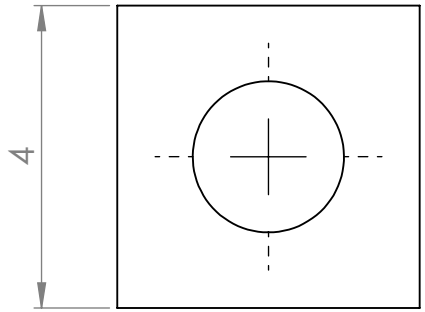

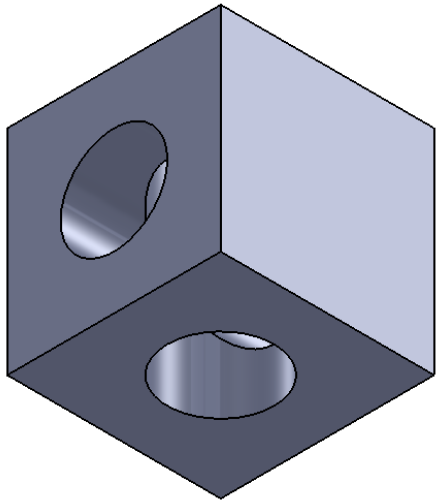

All tolerances ±0.1mm

TITLE:	Fiber Mount		
MATERIAL	6061-T6		
DATE	2010-09-22	SCALE: 10:1	SHEET 1 OF 1