# BigBOSS Fiber Positioners Status

2012-07-18

Joe Silber

# Infographic…

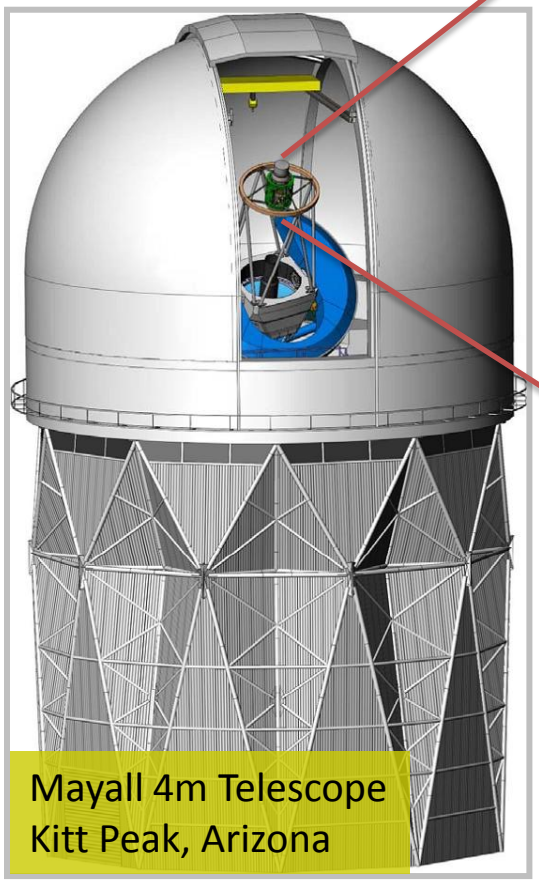

Mayall 4m Telescope
Kitt Peak, Arizona

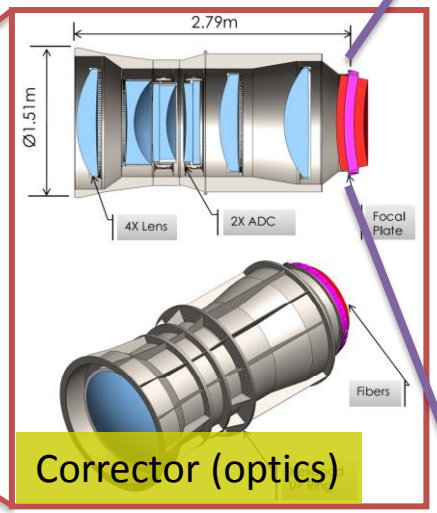


Corrector (optics)

End cap
(distributes optical fibers, control signals, power, cooling)

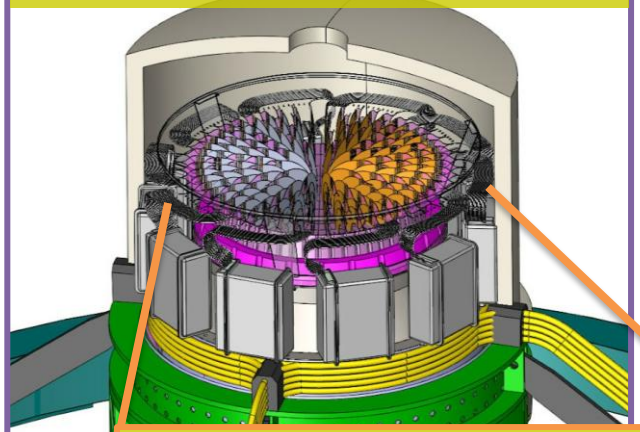

Focal plate
(5000 holes for 5000 positioners)

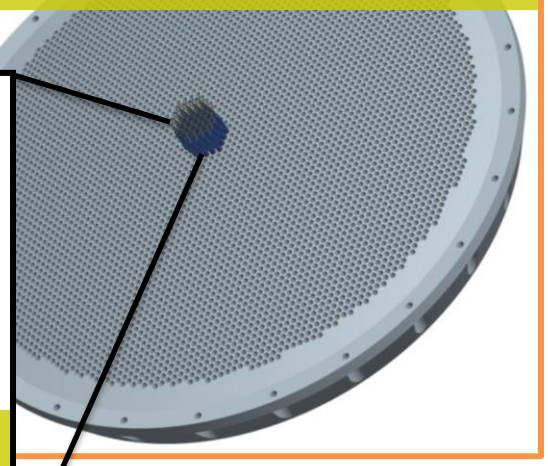

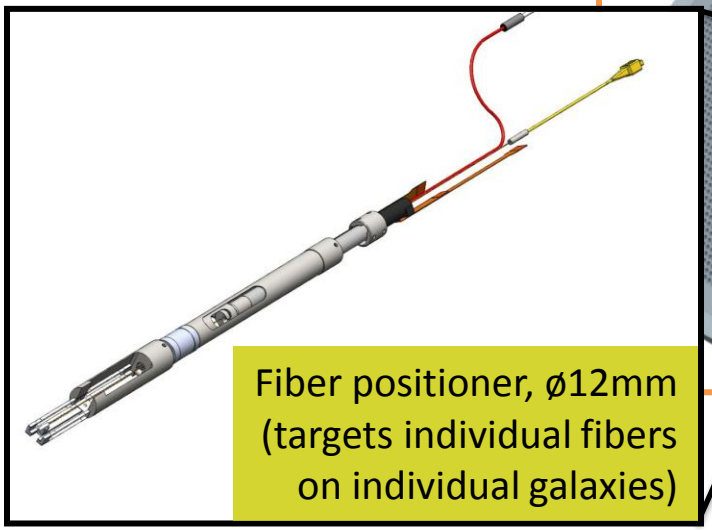

Fiber positioner, ø12mm
(targets individual fibers on individual galaxies)

# USTC

*currently building ø12.5 mm protos*

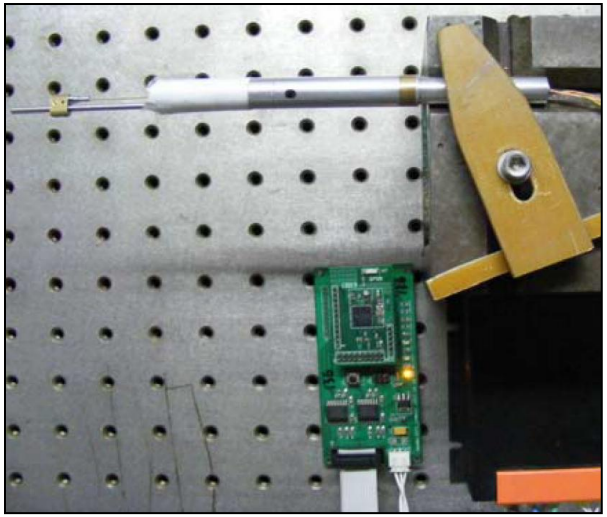

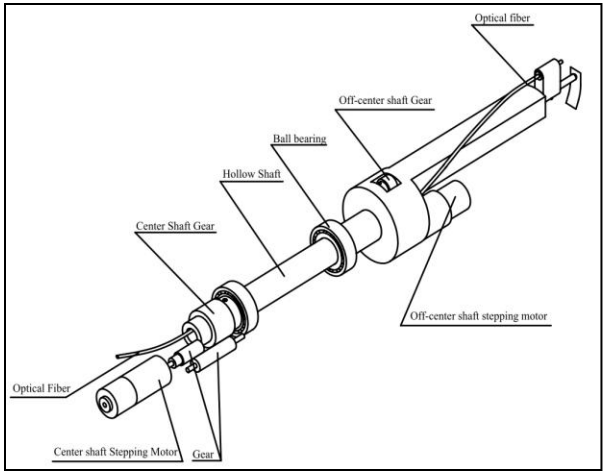


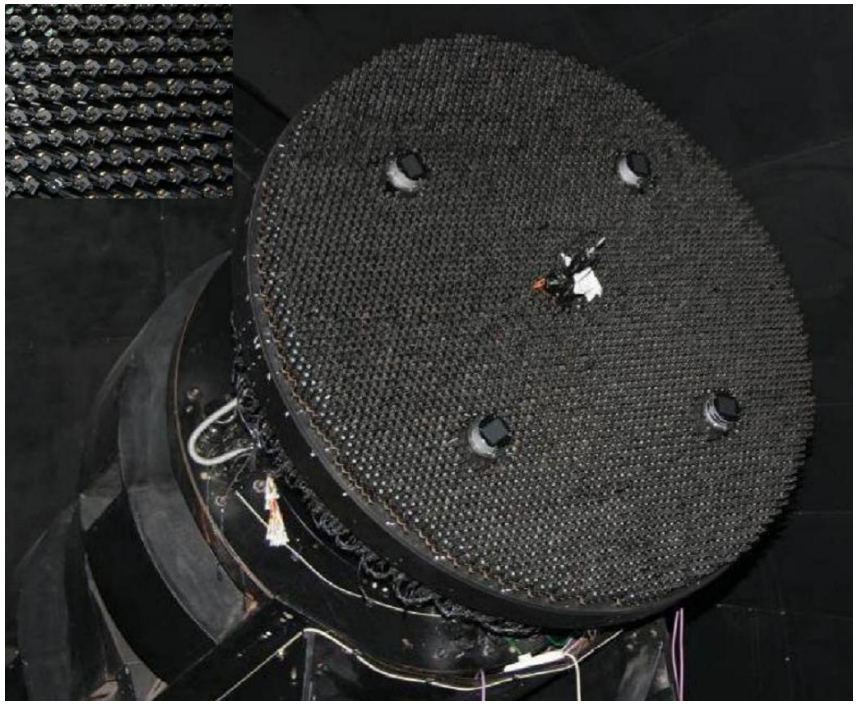

# IAA / AVS

## *currently building ø12 mm protos*

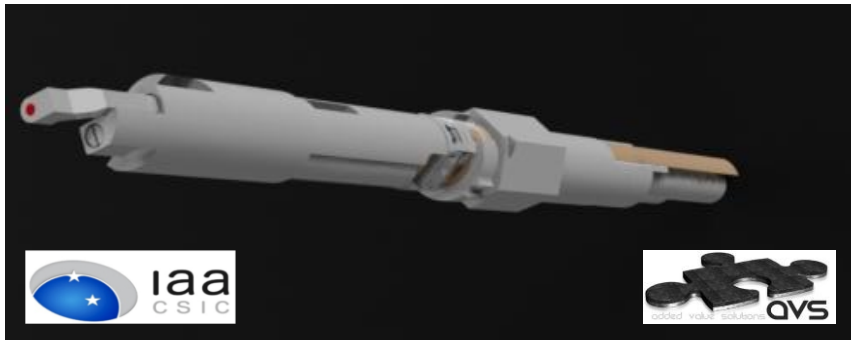


ø12mm screenshot

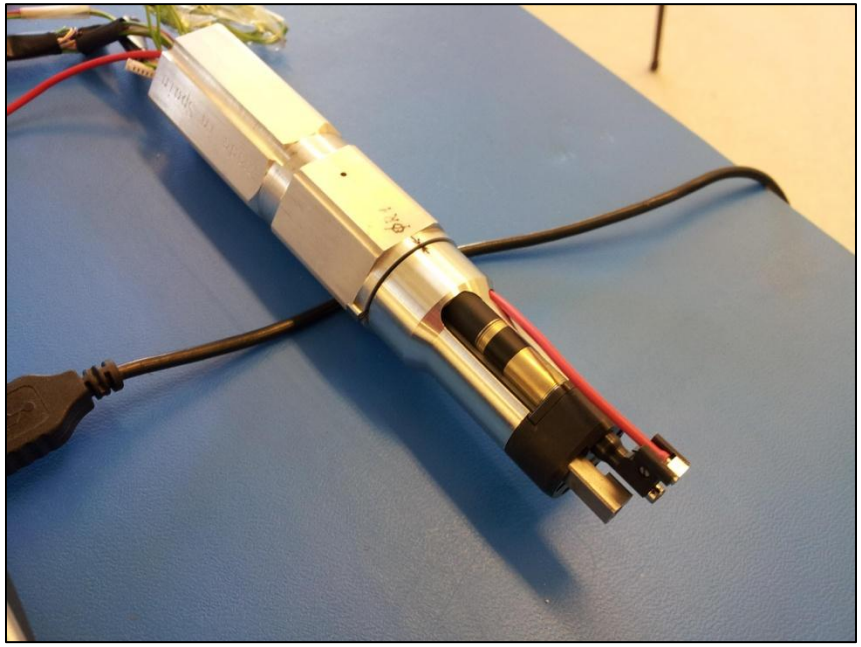

ø25mm SIDE, recently tested at LBNL
excellent repeatability to 1µm

# Newscale Cobra

*LBNL is currently testing ø8 mm protos*

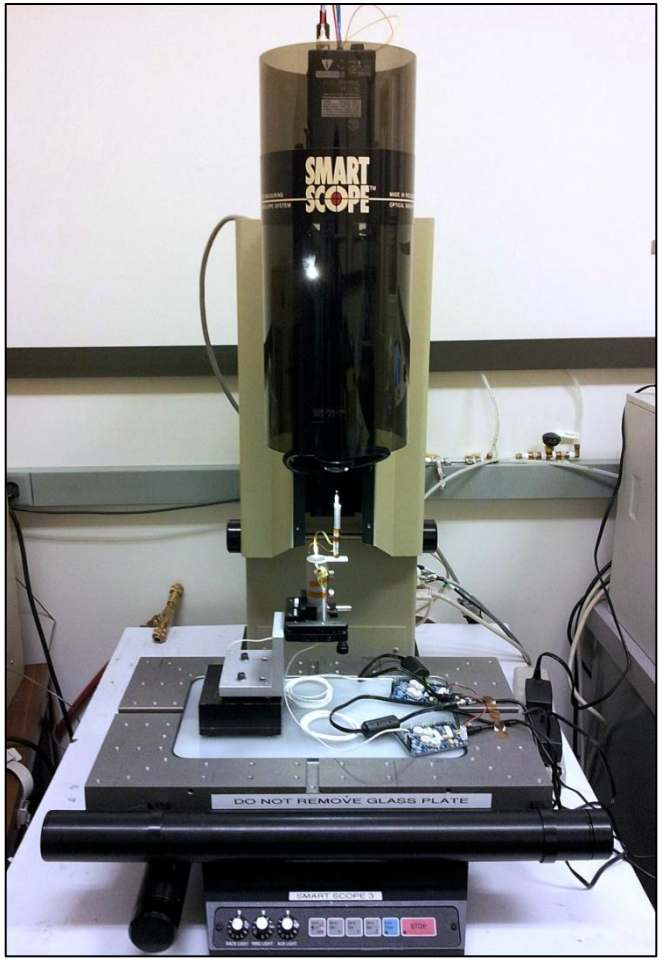

# LBNL

## *currently testing ø12 mm R-θ protos*

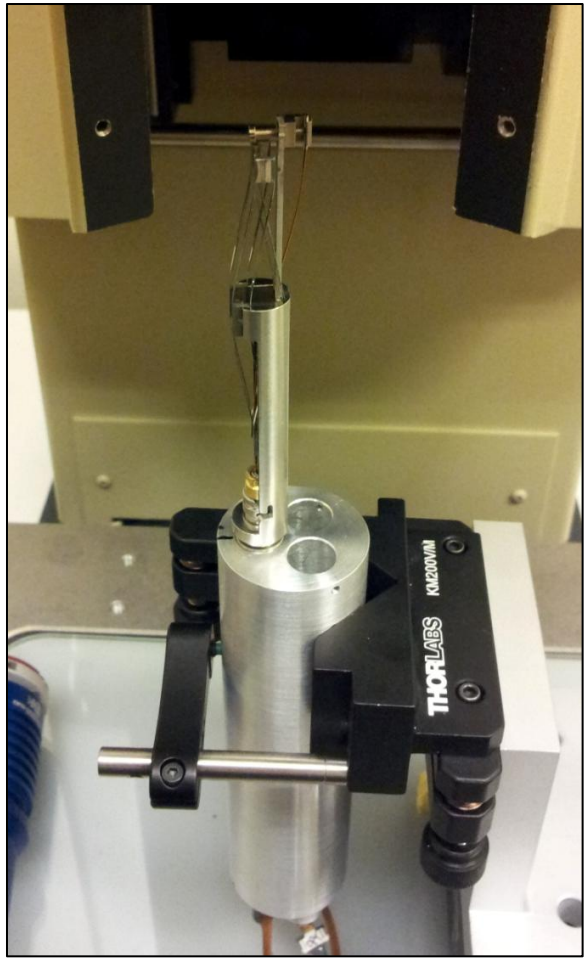


Everything is looking good.

Repeatability:
σ = 3μm (R-axis)
σ = 4μm (θ-axis)

See latest results in July SPIE paper (8450-116, or search my name, Joseph Silber)

# LBNL R-θ proto

## *repeatability plots from SPIE paper*

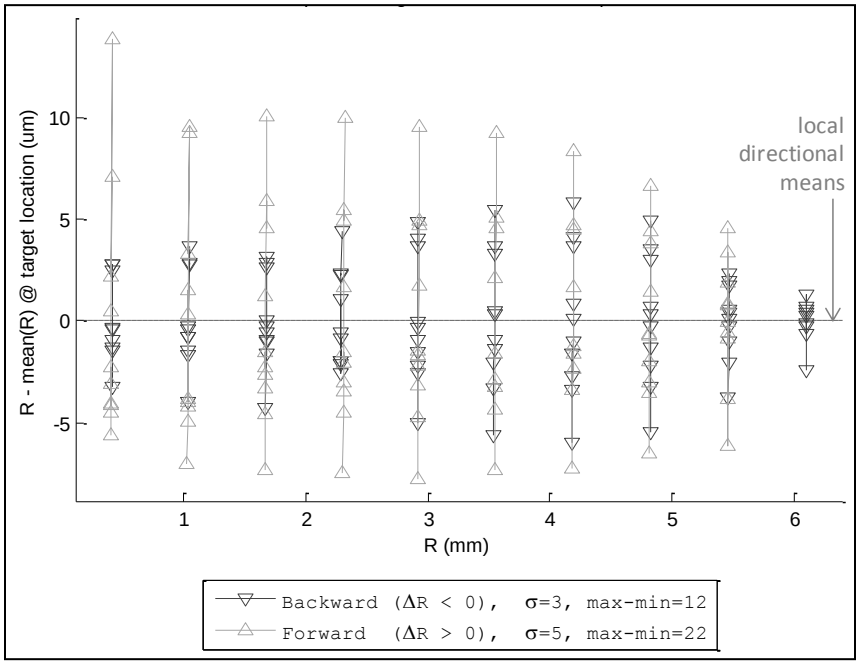


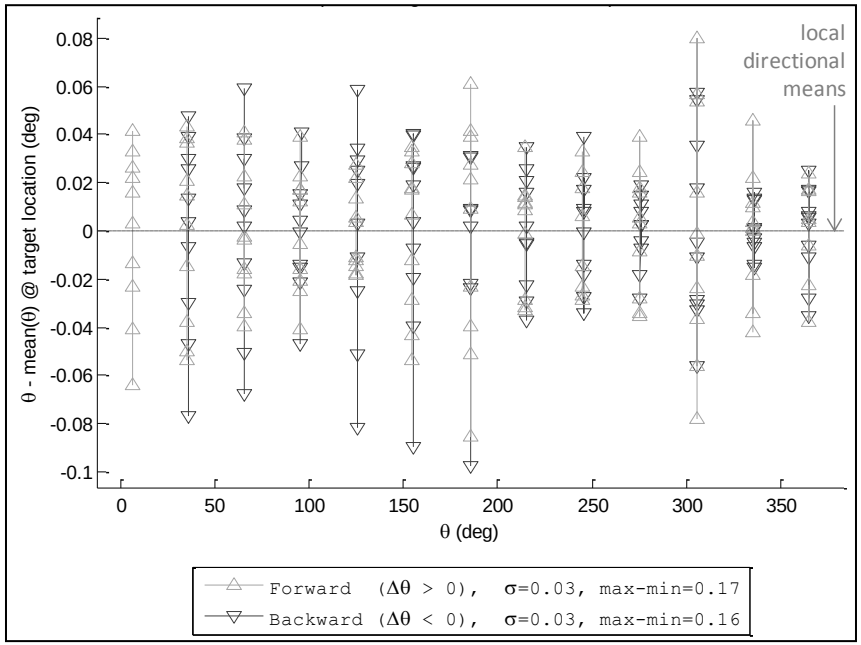

# Summary

| | USTC | IAA / AVS | Newscale | LBNL |
|---|---|---|---|---|
| Size (mm) | ø12.5 | ø12 | ø8 | ø12 |
| Kinematics | θ-ϕ | θ-ϕ | θ-ϕ | R-θ |
| Motors | Stepper | Stepper | Piezo | DC brushless with encoder |
| Heritage | LAMOST @ 1/4 scale | SIDE @ 1/4 scale | Cobra… @ 9/4 scale? | Ghiorso, Silber, Schenk, Silber |
| Current status | USTC is building protos | IAA is building protos | LBNL is testing their protos | LBNL is testing our protos |

θ-ϕ … eccentric axis
R-θ … polar

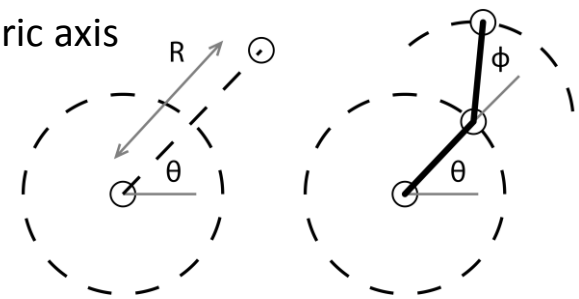

# End

(Some more images of LBNL R-θ proto follow)

# LBNL R-θ proto

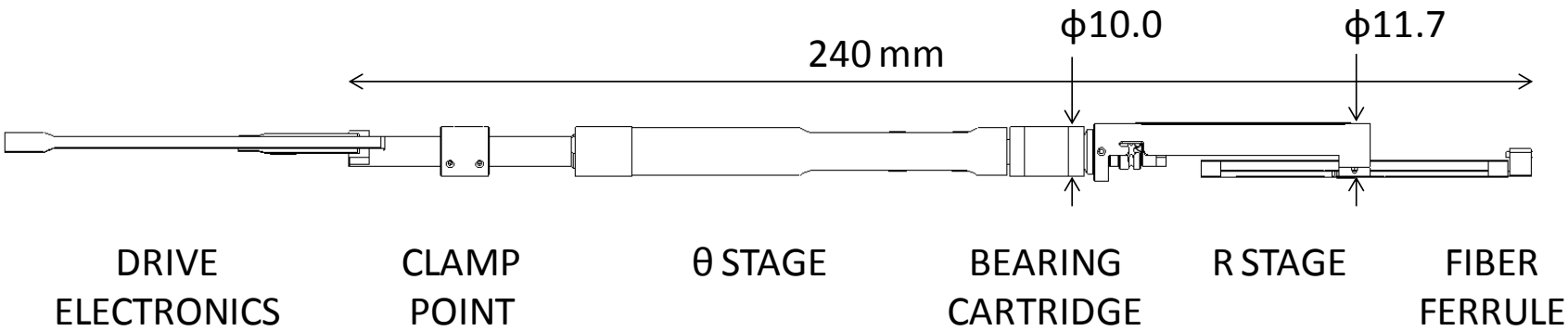

# LBNL R-θ proto

R STAGE (radial kinematics)

Flexure acts as:
1) extensible linear bearing
2) anti-backlash spring
3) fiber radius control

Multiple flexures are laminated in parallel on one tool.

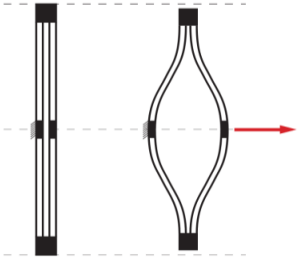

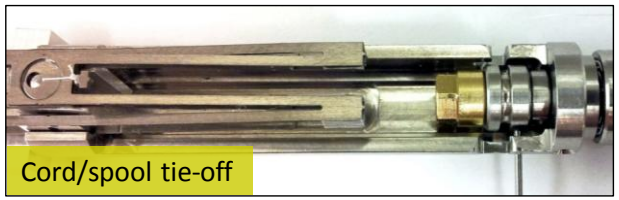


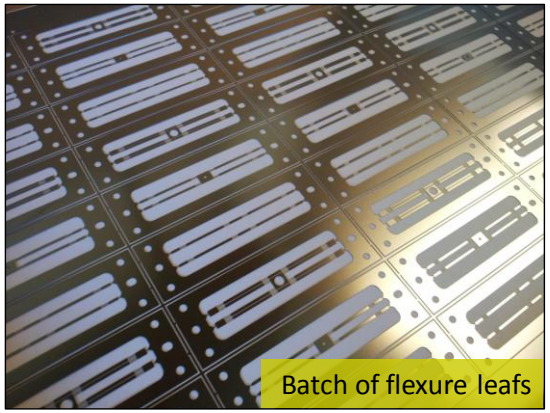

# LBNL R-θ proto

θ STAGE (angular kinematics)

θ stage transmits rotation around R drive components, then thru bearing to upper housing

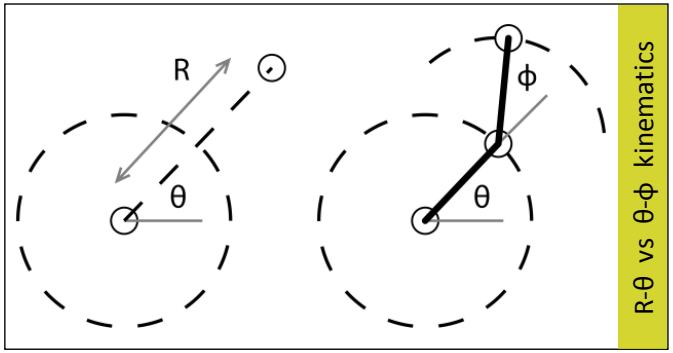


R-θ vs θ-ϕ kinematics

θ rotational constraint (clamp)

Bearing cartridge is the key datum, setting 5 DOF with respect to focal plane:

X, Y, Z position
XZ, YZ tilts

Clamp fixes XY rot.

Bearing constraint

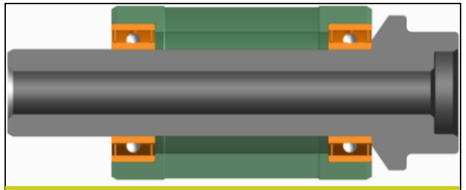

Preloaded bearing cartridge

# LBNL R-θ proto

MOTOR ASSEMBLY (drives R,θ)

Drive assembly inserts into R+θ unit

Fiber runs along motors, then thru center

Fiber + service bypasses via transfer gears

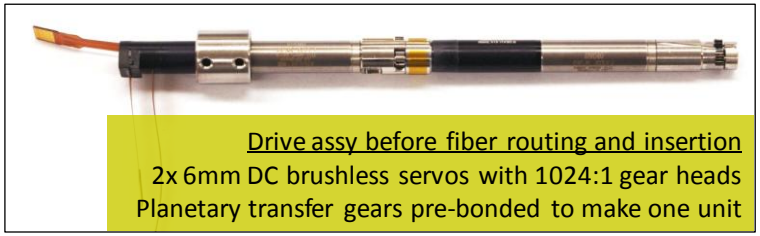
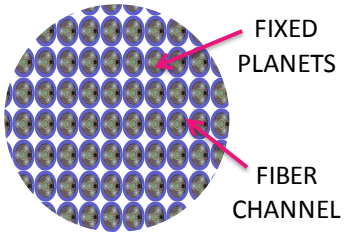
Drive assy before fiber routing and insertion
2x 6mm DC brushless servos with 1024:1 gear heads
Planetary transfer gears pre-bonded to make one unit