REQ	ITEM	PART NUMBER	DESCRIPTION
		9501-11482	PLATE, ALUMINUM 6061-T6, 5/8 THK.

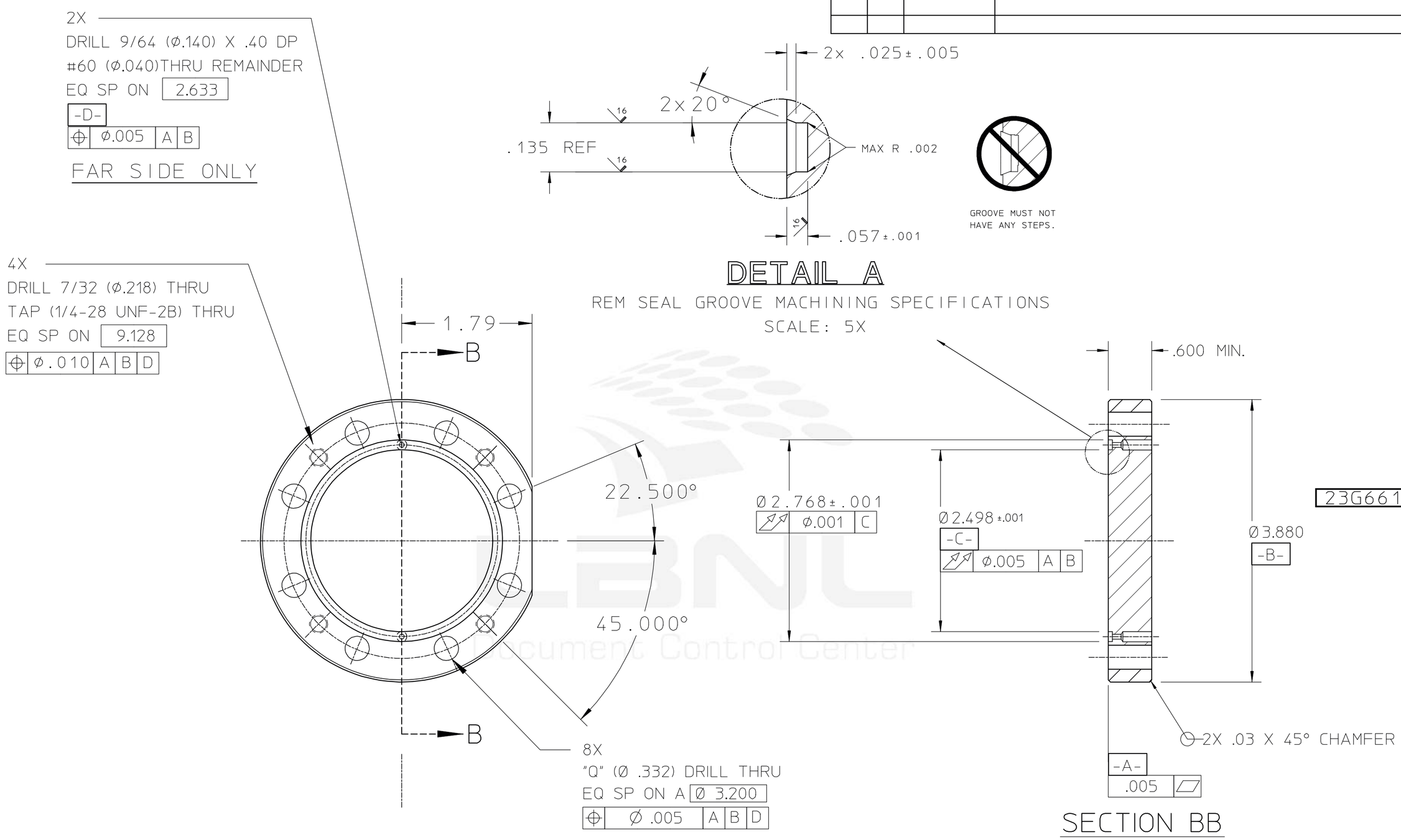

REV	DWG	CHK	ZONE	DATE	CHANGES

UNLESS OTHERWISE SPECIFIED

TOLERANCES			
	.X ±	FRAC. ±	
	.XX ± .010	ANGLES ± 1°	
	.XXX ± .005	FINISH 125√	

THREADS ARE CLASS 2
CHAMFER ENDS OF ALL SCREW THREADS 30°.
CUT 1.5 PITCH THRD RELIEF WITH ROUND NOSE TOOL ON MACHINE CUT THREADS.
BREAK EDGES .016 MAX. ON MACHINED WORK
REMOVE BURRS WELD SPLATTER & LOOSE SCALE
REFERENCES: ANSI Y14.5 & B46.1.

SHOP ORDERS

ACCT. NO.	SERIAL NO.	
DATE ISSD	DATE REQD.	NO. REQD.
DELIVER TO		
SURFACE TREATMENT DEGREASE		
IDENT. METH.		
DWG. BY R. Duarte	DATE 1/18/91	
CHK. BY M. Coleman	DATE 1/18/91	

LAWRENCE BERKELEY LABORATORY
UNIVERSITY OF CALIFORNIA-BERKELEY

ALS STORAGE RING
VACUUM CHAMBER
NEG REM FLANGE

PATENT CLEAR	DWG. TYPE	SHOWN ON	SCALE FULL	DO NOT SCALE PRINTS
MICROFILMED	DESIGN ACCT. NO.	CATEGORY CODE AL0531	DWG. NO. 23G6613	SIZE / REV.

AUTO GENERATED PDF – Dec 02 2004 10:57:47 PST

Officially Released to the LBNL Document Control Center
Released: January 18th, 1991 DCC Auth Key: 7T7YJ871XH
Downloaded by: Keith D Franck at March 23, 2009 10:32:54