REQ	ITEM	PART NUMBER	DESCRIPTION
			PLATE, 2.25 THK, ALUM, 6061-T561

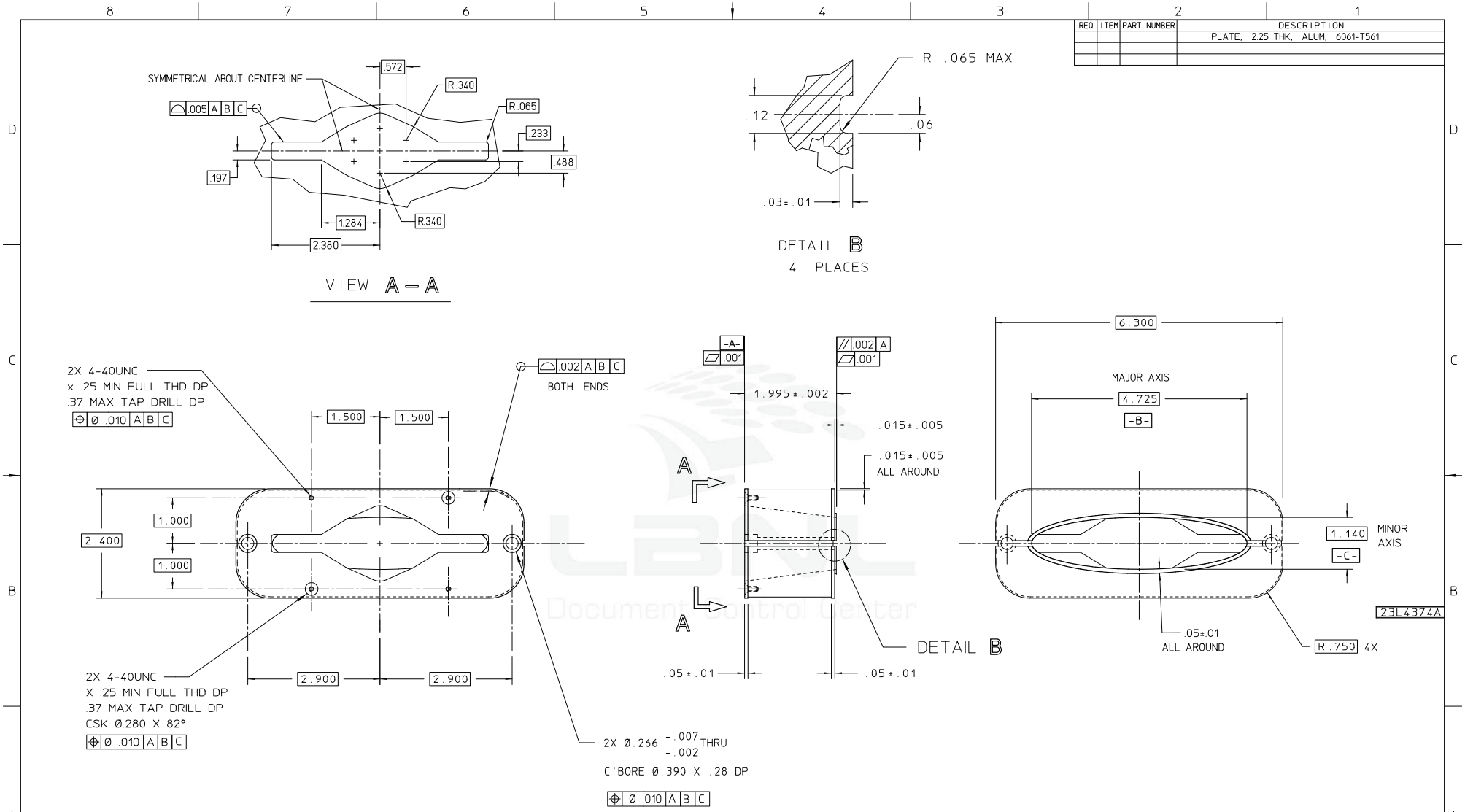

NOTES:

THIS IS AN ULTRA HIGH VACUUM PART:

1. USE OF RESIN BONDED ABRASIVES UNDER POWER IS PROHIBITED.
2. USE OF CUTTING FLUIDS CONTAINING SULPHUR OR SILCONE IS PROHIBITED.

REV	DWG	CHK	ZONE	DATE	CHANGES
A	NBS	TFH		8-04-92	UNDERCUT SURFACES FOR BETTER PUMPING

UNLESS OTHERWISE SPECIFIED
TOLERANCES: X ± — FRAC. ± — ; XX ± .03 — ANGLES ± — ; XXX ± .005 — FINISH MINIMUM 125√
THREADS ARE CLASS 2
CHAMFER ENDS OF ALL SCREW THREADS 30°.
CUT 1.5 PITCH THRD RELIEF WITH ROUND NOSE TOOL ON MACHINE CUT THREADS
BREAK EDGES .010 MAX. ON MACHINED WORK
REMOVE BURRS WELD SPLATTER & LOOSE SCALE
REFERENCES: ANSI Y14.5 & B46.1.

SHOP ORDERS
ACCT. NO. — SERIAL NO.
DATE ISSD — DATE REQD. — NO REQD.
DELIVER TO
SURFACE TREATMENT
IDENT. METH.
DWG. BY N. SEARLS — DATE 3-25-92
CHK. BY A. BLACK — DATE 3-25-92

LAWRENCE BERKELEY LABORATORY
UNIVERSITY OF CALIFORNIA-BERKELEY
ALS - STORAGE RING
VACUUM CHAMBERS - TRANSITION STRAIGHT SECTION
APERTURE INSERT

PATENT CLEAR	DWG. TYPE	SHOWN ON	SCALE	DO NOT SCALE PRINTS
	CD	2300236	1/1	
MICROFILMED	DESIGN ACCT. NO	CATEGORY CODE	DWG NO.	SIZE / REV.
		AL0531	23L4374	A

Officially Released to the LBNL Document Control Center
Released: March 25th, 1992 DCC Auth Key: HHWS7NCGDF
Downloaded by: Keith D Franck at March 11, 2009 15:03:51
AUTO GENERATED PDF – Dec 13 2005 19:38:11 PST