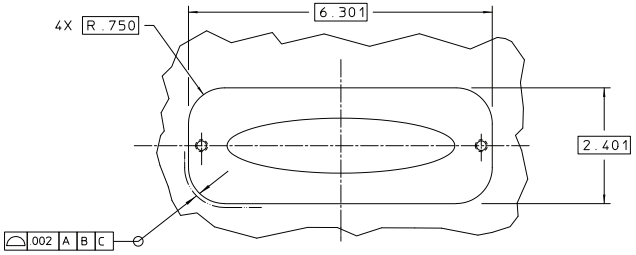

VIEW A–A

SECTION E–E SHOWN ON 23L4366

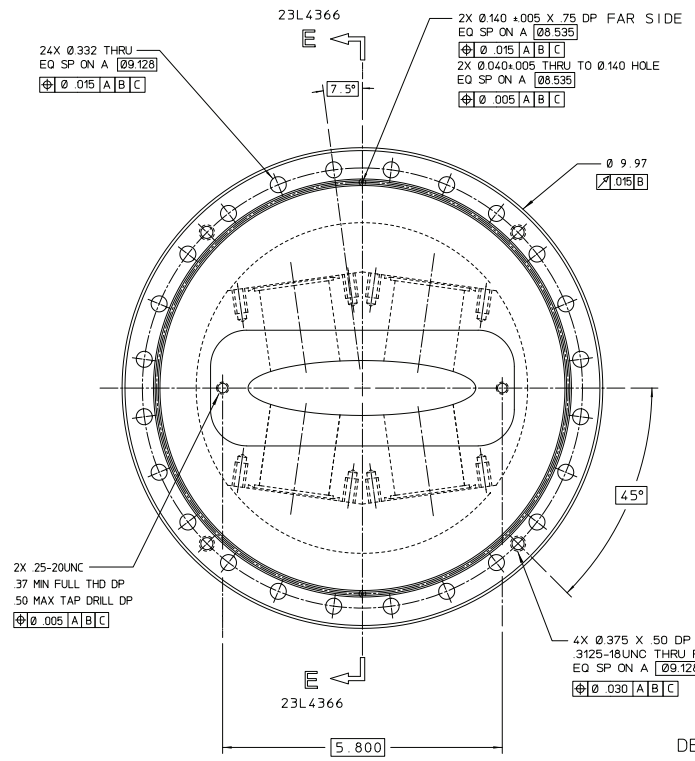

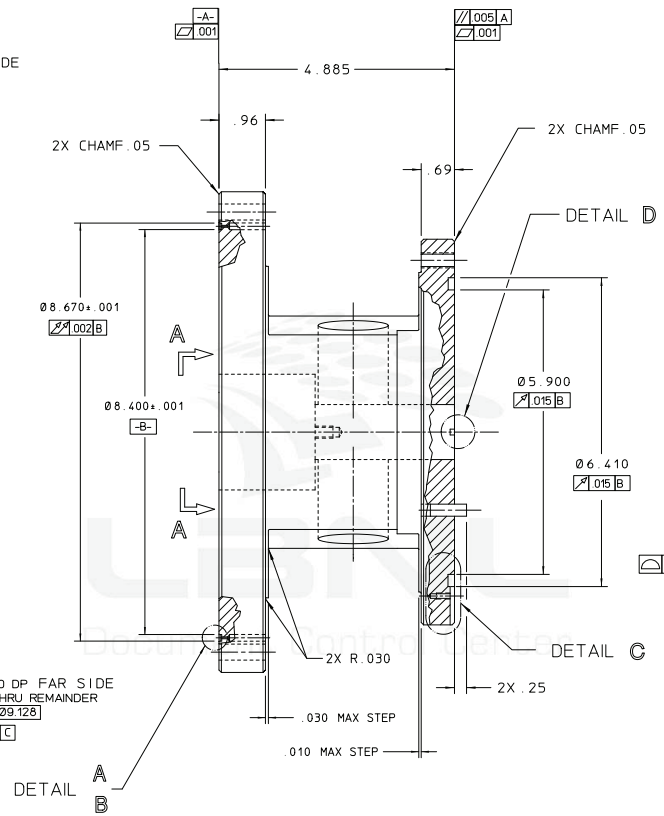

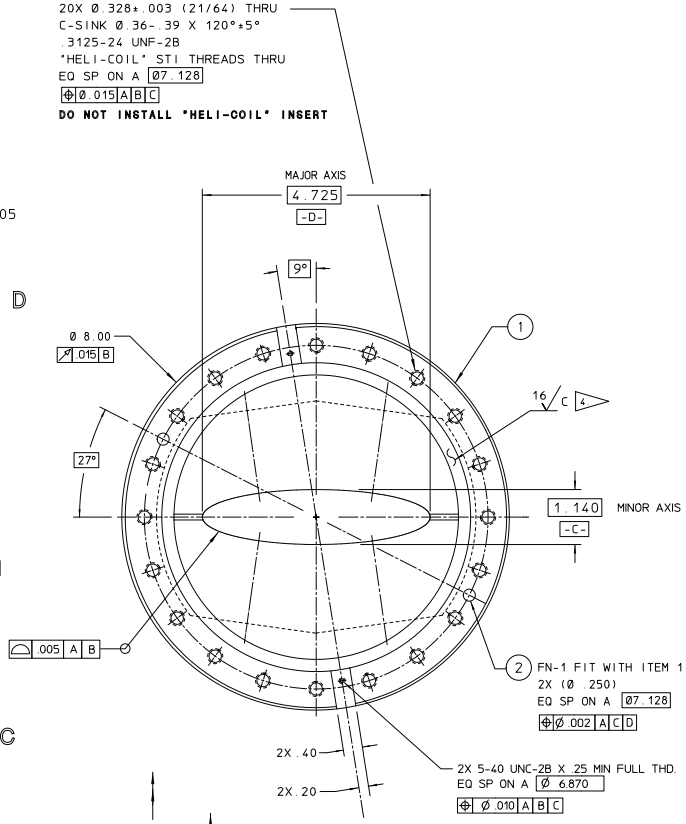

NOTES:

1. GROOVE (SHOWN IN DETAIL A) MUST NOT HAVE ANY STEPS AS SHOWN BELOW.

THIS IS AN ULTRA HIGH VACUUM PART:

2. USE OF RESIN BONDED ABRASIVES UNDER POWER IS PROHIBITED.

3. USE OF CUTTING FLUIDS CONTAINING SULPHUR OR SILICONE IS PROHIBITED.

4. ON ALL SURFACES OF 16/C THE SYMBOL "C" DESIGNATES A SURFACE FINISH WITH THE LAY APPROXIMATELY CIRCULAR RELATIVE TO THE CENTER OF THE SURFACE TO WHICH THE SYMBOL IS APPLIED.

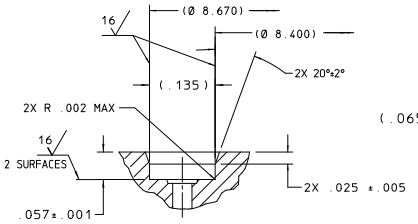

DETAIL A 1

(ROTATED 90° CW FOR CLARITY)

SCALE: 10/1

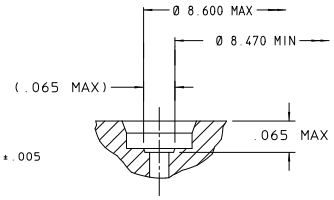

DETAIL B

(ROTATED 90° CW FOR CLARITY)

SCALE: 10/1

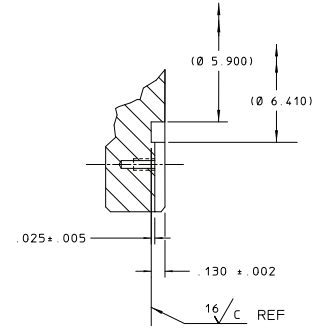

DETAIL C

2 PLACES

SCALE: NONE

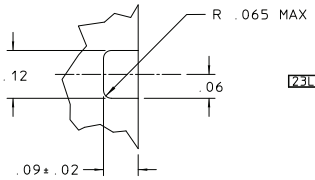

23L4356A

DETAIL D

2 PLACES

SCALE: NONE

REV	DWG	CHK	ZONE	DATE	CHANGES
A	NBS	TFH		8-6-92	RECUT FACE TO UHV CLEAN

REQD	ITEM	PART NO.	DESCRIPTION
		23L4366	SECTION E - E AND DETAILS
2	2		DOWEL PIN, Ø.250 X .75 LG. SST
1	1		PLATE, 5" THK, ALUM, TYPE 6061-T651

UNLESS OTHERWISE SPECIFIED — SHOP ORDERS — TOLERANCES: X ± ; FRAC. ± ; .XX ± .03 ; ANGLES ± 1° ; .XXX ± .005 ; FINISH MINIMUM 125

ACCT. NO. — SERIAL NO. — DATE (REQD) — IND. (REQD) — DELIVER TO — SURFACE TREATMENT — LIENT MELTS — DWG. BY: N. SEARLS — DATE 2/8/92 — CHK. BY: A. BLACK — DATE 2/8/92

THREADS ARE CLASS 2. CHAMFER ENDS OF ALL SCREW THREADS 30° OR 1.5 PITCH END RELIEF WITH ROUND NOSE TOOL ON MACHINE CUT THREADS. BREAK EDGES .010 MAX. ON MACHINED WORK. REMOVE BURRS WELD SPLATTER & LOOSE SCALE. REFERENCES: ANSI Y14.5 & B46.1

LAWRENCE BERKELEY LABORATORY
UNIVERSITY OF CALIFORNIA-BERKELEY

ALS - STORAGE RING
VACUUM CHAMBERS - TRANSITION STRAIGHT SECTION
EXIT END-HOLDER, LEP BPM

PATENT CLEAR — DWG. TYPE CD — SHOWN ON — SCALE 1/1 — DO NOT SCALE PRINTS — MICROFILMED — DESIGN ACCT. NO — CATEGORY CODE AL0531 — DWG. NO 23L4356 — SIZE A — REV A

AUTO GENERATED PDF – Dec 13 2005 19:38:02 PST

Officially Released to the LBNL Document Control Center
Released: February 8th, 1992 DCC Auth Key: LWQD5DKKIS

Downloaded by: Keith D Franck at March 11, 2009 15:06:24