ITEM	PART NO	REQD	DESCRIPTION	MATERIAL
3	21F416-1		SECTOR FOAM FACED	-
2	21f425		CYANATE ESTER FOR FOAM	BRYTE E01189-2M
1	21F355		FACING, SECTOR NON-MOUNTSIDE	P30 CARBON-CARBON

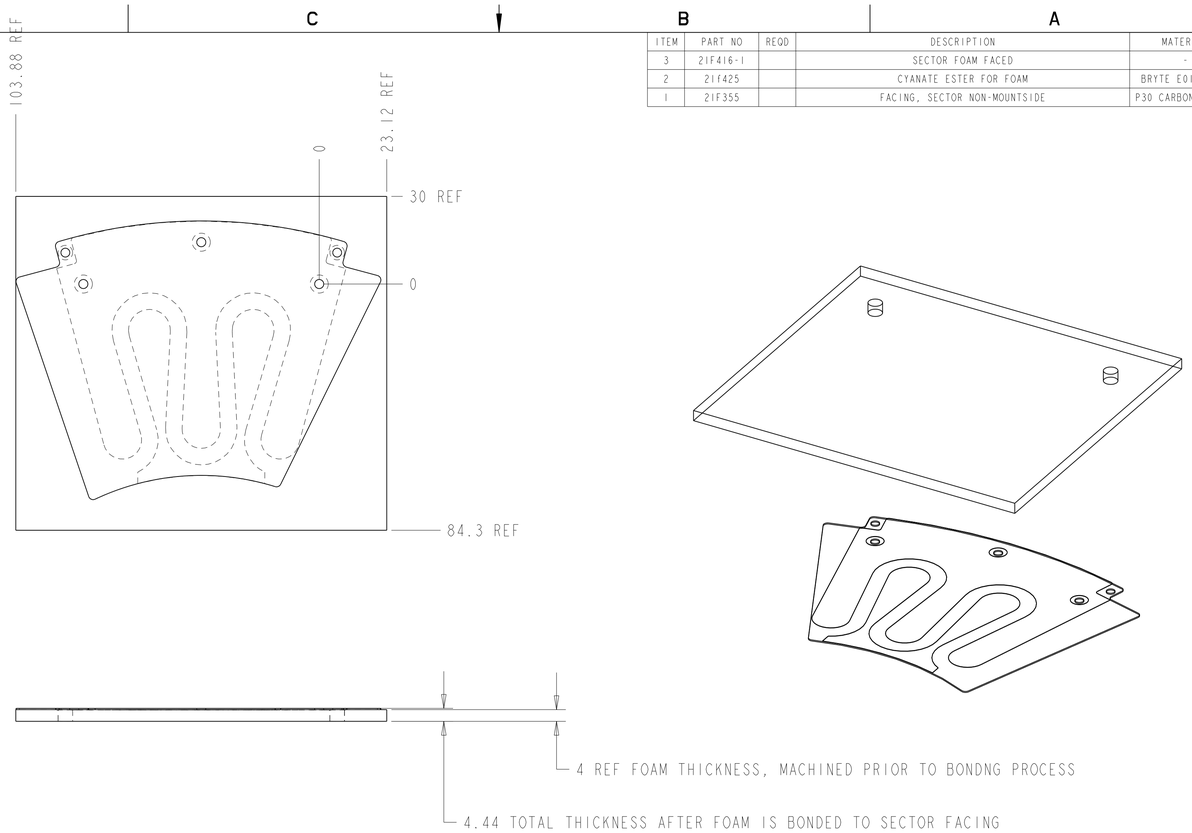

REV	DWG	CHK	ZONE	DATE	CHANGES

UNLESS OTHERWISE SPECIFIED

TOLERANCES		
	X.X ± 0.5	FRAC. ± 1/64
	X.XX ± 0.05	Angles ± 1.00°
	X.XXX ± 0.010	FINISH 125/(μin)

DO NOT SCALE PRINT

THREADS ARE CLASS 2
CHAMFER ENDS OF ALL SCREW TREADS 30°
CUT ROUND, 1.5 THREAD RELIEF ON MACHINED THREADS
BREAK EDGES .016 MAX. ON MACHINED WORK
REMOVE BURRS, WELD SPLATTER & LOOSE SCALE
IN ACCORDANCE WITH ASME Y14.5M & B46.1

SHOP ORDERS

ACCT NO.	NO. REQD	SER NO.	-
DEL TO		DATE ISSD	-
SURFACE TREATMT	-	DATE REQD	-
IDENT METHOD	TAG		
PROJECT NUMBER	ATL-IP-ED-0041	US ATLAS SILICON SUBSYSTEM (Logo)	
PROJECT NAME	US ATLAS SILICON SUBSYSTEM		
DWG BY	J WIRTH	DATE	19-Jun-01
CHK BY	E ANDERSSEN	DATE	
APR BY	E ANDERSSEN	DATE	

ERNEST ORLANDO LAWRENCE
BERKELEY NATIONAL LABORATORY
UNIVERSITY OF CALIFORNIA - BERKELEY

ATLAS PIXEL DETECTOR
DISK SECTOR, MODULE LOCAL SUPPORT
SECTOR FACING WITH FOAM BLANK

MICROFILMED:	DWG. TYPE	SHOWN ON	SCALE: 1.000	DO NOT SCALE PRINTS
	ASSEM		SHEET 1 OF 1	
PATENT CLEAR:	DESIGN ACCT. NO.	CATEGORY CODE	DWG. NO.	SIZE / REV.
	PIAP-11	AP6110	21F4023	1

DWG. NO. 21F4023 SIZE 1 REV. 1 SH. 1

DWG. TYPE: 21F402 MODEL TYPE: 21F402